Ball Valves

General Purpose and Special Application

60 Series

- 1/8 to 2 in. and 6 to 25 mm sizes
- Stainless steel, carbon steel, brass, and special alloy materials
- On-off (2-way) and switching (3-way) valves
- Compensating seat design
- Live-loaded, two-piece stem packing

Swagelok

Contents

Important Information About Swagelok Process Ball Valves 2

Features 2

Materials of Construction 4

Testing 5

Cleaning and Packaging 5

Pressure-Temperature Ratings 6

Ordering Information 8

Dimensions

- Swagelok® Tube Fitting End Connections 9
- Female Pipe Thread End Connections 10
- Tube and Pipe Socket Weld Connections 11
- Pipe Butt Weld Connections 12
- Tube Extension End Connections 13
- VCO® and VCR® Face Seal Fitting End Connections 13
- Sanitary Fitting End Connections 14
- Mixed End Connections 14

Special Application Valves

- Steam 15
- Thermal 16
- Fire 17
- Chlorine 18
- All Welded 19
- Low Temperature 20
- Rapid-Cycle Service 21

Options and Accessories 22

Pneumatic Actuators 24

ISO 5211-Compliant Pneumatic Actuators 28

Options for Pneumatic Actuators 31

Electric Actuators 31

Important Information About Swagelok Process Ball Valves

⚠ **Swagelok ball valves are designed to be operated in a fully open or fully closed position.**

⚠ **A packing adjustment may be required periodically to increase service life and to prevent leakage.**

Features

- Quarter-turn actuation
- Stainless steel, carbon steel, brass, and special alloys
- Wide selection of seat materials
- Variety of end connections in 1/8 to 2 in. and 6 to 25 mm sizes
- Pneumatic and electric actuators
- Optional vent porting

On-Off (2-Way) Valve

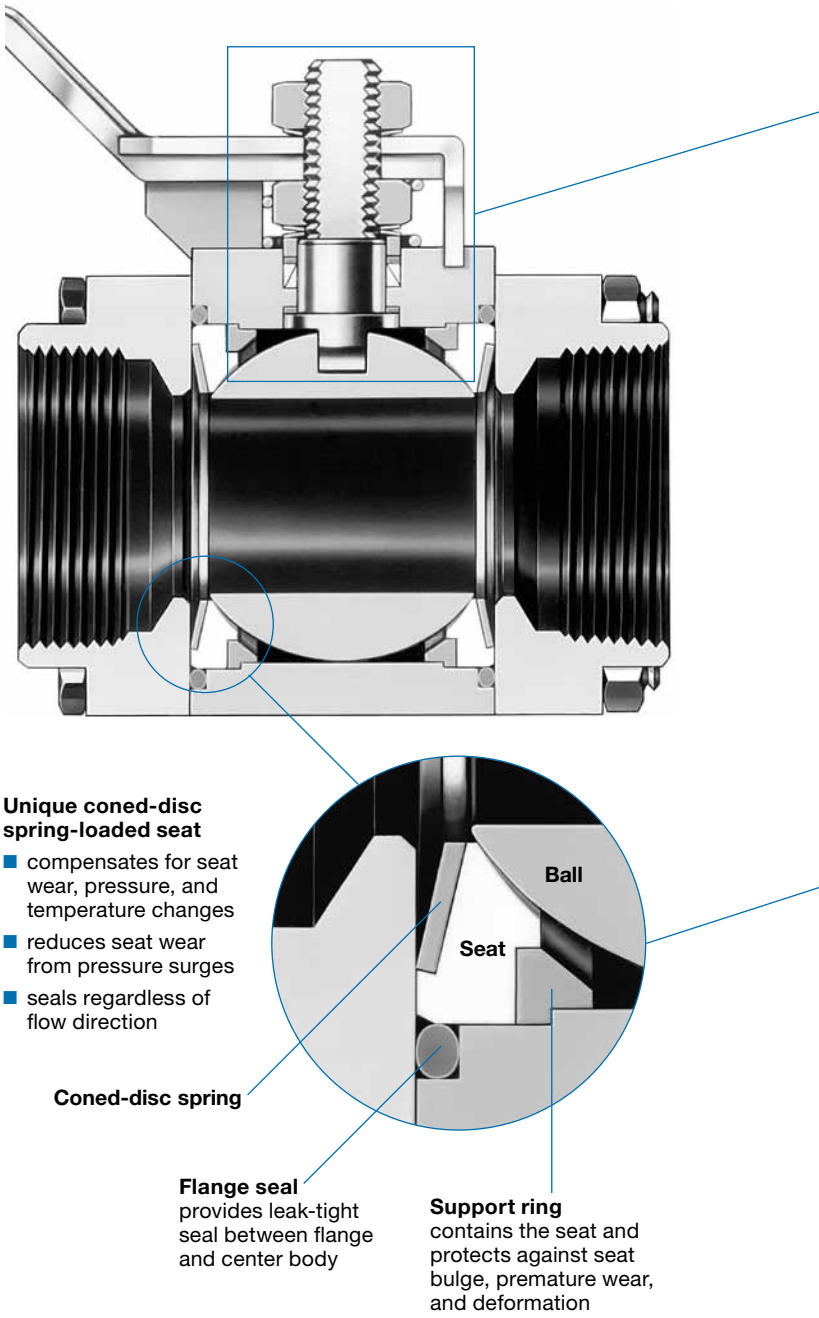

Features

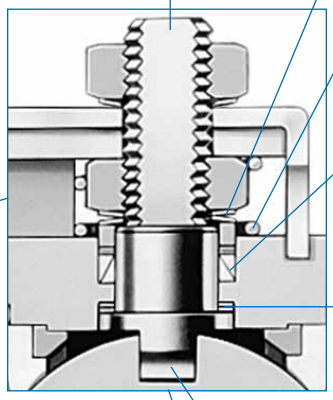

Directional stem flats
show open or closed position

Stem springs
compensate for changes in pressure and temperature, and wear

Grounding spring
grounds stem to provide continuity for antistatic protection

Live-loaded, 2-piece chevron stem packing
- requires less operating torque
- improves performance
- compensates for stem wear

High-strength stem bearings
- provide smooth actuation
- eliminate galling between valve stem and body
- resist wear

Bottom-loaded stem
- prevents stem blowout
- enhances system safety

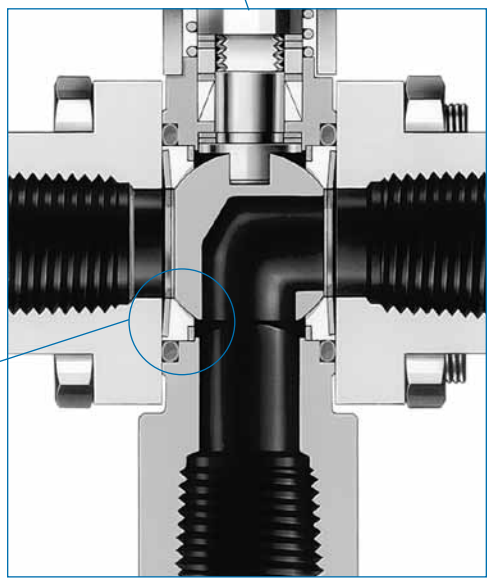

Switching (3-Way) Valve

All stainless steel switching ball valves incorporate many of the features of the on-off (2-way) design. The one-piece center body uses no welding and allows 180° actuation. The switching design allows the user to:

- divert flow from a common inlet to one of two outlets
- block flow from one inlet port and bleed out the opposite port.

Flexing seat design ensures leak-tight seal in both low- and high-pressure systems

Under low pressure, seals are created by the coned-disc spring-loaded seats pushing against the ball. Pressure is not required to create a seal.

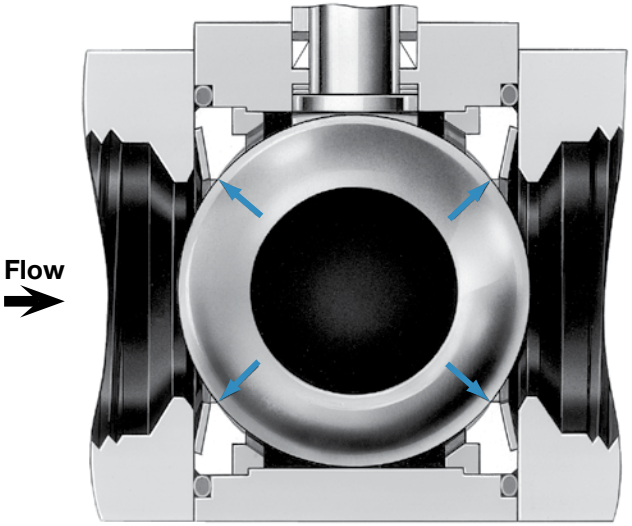

Under high pressure, the ball is forced downstream, flexing the downstream seat and creating a seal. The upstream seat also flexes with the ball movement and maintains a seal.

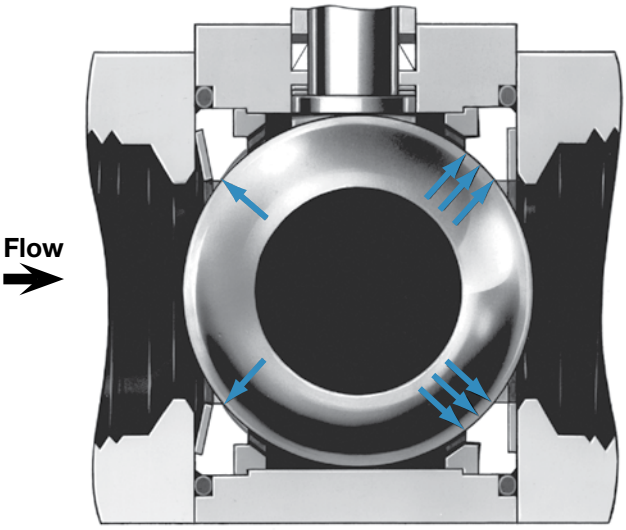

Materials of Construction

Component	Valve Body Materials①		
	Stainless Steel	Carbon Steel	Brass
	Material Grade/ASTM Specification		
1 Stem nut	316 SS	Low-alloy steel grade 7/A194	
2 Stem spring②	Strain-hardened 316 SS/A240		
3 Stop plate②	304 SS/A240 or 316 SS/A240		
4 Handle			
5 Handle sleeve	Vinyl		
6 Grounding spring	302 SS/A313		
7 Stem nut③	316 SS	Low-alloy steel grade 7/A194	
8 Stem springs (2)	Strain-hardened 316 SS/A240		
9 Gland	PTFE-coated 316 SS/B783		Brass CDA 360/B16
10 Packing support	Polyetheretherketone (PEEK)		
11 *Top packing*	*Reinforced PTFE④*		
12 *Bottom packing*			
13 *Body*	*316 SS/A479 or CF3M/A351 W60—316L SS/A479*	*WCB⑤/A216*	*Brass CDA 356 or 360/B16*
14 *Stem bearing(s)⑥*	*Alloy X-750/AMS 5542*		*PEEK*
15 *Stem*	*316 SS/A276 or A479*		
16 *Ball*	*316 SS/A276 or A479*		*62 series—316 SS/A276; 63, 65 series—brass CDA 360/B16*
17 *Support rings (2)*	*316 SS/A240, A276, or A479*		
18 *Seats (2)*	*Reinforced PTFE④*		
19 *Coned-disc springs (2)*	*Strain-hardened 316 SS/A167 or A240*		
20 *Flange seals (2)*	*Fluorocarbon FKM⑦*		
21 *Flanges (2)*	*316L SS/A479 or CF3M/A351*	*WCB⑤/A216*	*Brass CDA 360/B16*
22 Body fasteners (4)	316 SS gr B8M cl 2/A193	Cadmium-plated carbon steel grade 8/SAE J429⑧	
23 Body hex nuts (8 or 4)	316 SS gr 8M str hd/A194	Cadmium-plated carbon steel grade 8/SAE J995⑨	
Lubricants	*Silicone-based and PTFE-based; other lubricants available*		

Wetted components listed in *italics.*

① **Special alloy materials** available include alloy 400, alloy C-276, alloy 20, alloy 600, and titanium. Contact your authorized Swagelok sales and service representative.

② 62 series—no upper stem spring and stop plate integral with handle.

③ Valves assembled with pneumatic actuators contain a lock tab (not shown) to secure the nut to the stem.

④ Additional materials available; see **Additional Seat Materials,** below.

⑤ Coated with hydrocarbon rust-preventive compound.

⑥ Coated with molybdenum disulfide with hydrocarbon binder. Alloy X-750—2 bearings; PEEK—1 bearing.

⑦ Additional materials available; see **Additional Flange Seal Materials,** page 8.

⑧ 62 series—material specification is ASTM A574.

⑨ 62 series—nuts are grade 4130 or 4140/ASTM A322 or A331.

Additional Seat Materials

Valves with Seats of...	Also Contain...	And These Lubricants
Alloy X-750①	S17400 SS ball① and 316 SS back seats	Silicone-based, fluorinated tungsten disulfide-based, and PTFE-based
Carbon/glass PTFE	Same as valves with PTFE seats	
PEEK①②	PEEK stem bearing① and packing①	PTFE-based
UHMWPE	UHMWPE packing, PEEK stem bearing,① ethylene propylene O-rings, and uncoated packing gland	Hydrocarbon-based and silicone-based
Virgin PTFE	Virgin PTFE packing	Silicone-based and PTFE-based

① Molybdenum disulfide coated.

② 62 and 65 series—Grafoil®-lined coned-disc springs; 67 and 68 series—PEEK-lined coned-disc springs.

Materials of Construction

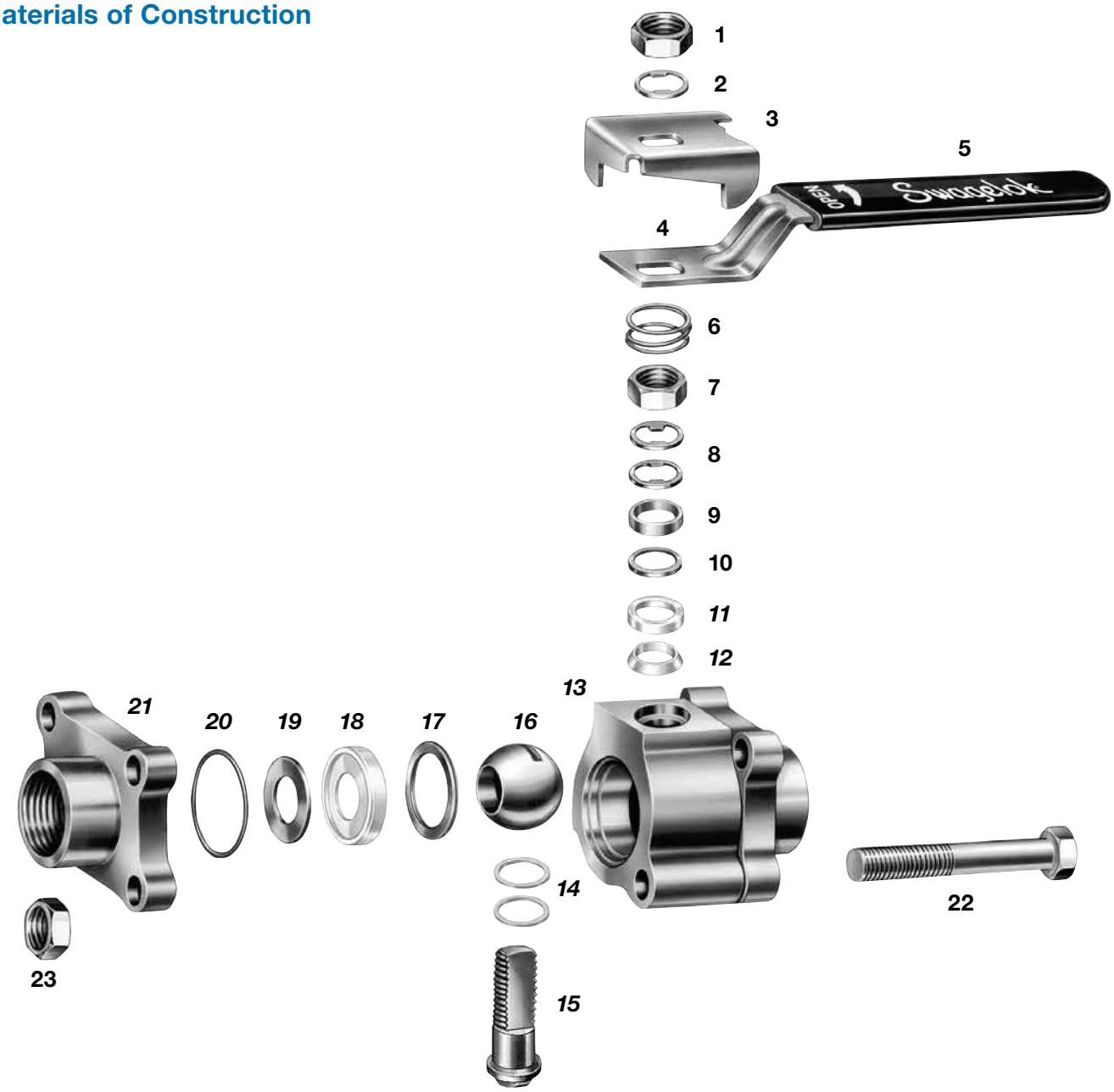

Testing

Plastic-Seated Valves

Every 60 series ball valve is factory tested with nitrogen at 1000 psig (69 bar) or its maximum working pressure if less than 1000 psig (69 bar). Seats have a maximum allowable leak rate of 0.1 std cm^3/min, lower than allowable in FCI 70-2 Specification Class VI.

Shell testing with nitrogen at 1000 psig (69 bar) or the maximum rated pressure if less than 1000 psig (69 bar) is performed to a requirement of no detectable leakage with a liquid leak detector.

Shell testing at 1.5 times the maximum working pressure is performed on CE-marked 67 and 68 series valves.

Metal-Seated Valves and 3-Way PEEK-Seated Valves

Every 60 series ball valve is factory tested with nitrogen at 50 psig (3.4 bar) for leak-tight integrity of the seats as specified by FCI 70-2 Specification Class VI.

Shell testing with nitrogen at 1000 psig (69 bar) or the maximum rated pressure if less than 1000 psig (69 bar) is performed to a requirement of no detectable leakage with a liquid leak detector.

Shell testing at 1.5 times the maximum working pressure is performed on CE-marked, stainless steel 67 and 68 series valves.

Special-Application Valves

Certain valves may have different testing requirements, as described in **Special-Application Valves.**

Cleaning and Packaging

Every 60 series ball valve is cleaned in accordance with Swagelok *Standard Cleaning and Packaging (SC-10),* MS-06-62. Cleaning and packaging in accordance with Swagelok *Special Cleaning and Packaging (SC-11),* MS-06-63, to ensure compliance with product cleanliness requirements stated in ASTM G93 Level C is available. Contact your authorized Swagelok representative for more information.

Pressure-Temperature Ratings

Pressure-temperature ratings are based on standard materials of construction, as listed on page 4 and in the table notes below. Ratings for valves with alternative materials of construction may not match those shown. For example, 2-way, stainless steel 67 and 68 series valves with reinforced PTFE seats are rated at 2200 psig at 100°F (151 bar at 37°C) when assembled with optional cadmium-plated carbon steel grade 8 fasteners.

Reinforced PTFE Seats (60T Series)

Flow Pattern	On-Off (2-Way)					Switching (3-Way)	
Series	62, 63, 65, W63, W65	67, 68	62, 63, 65, 67, 68	62	63, 65	62, 63, 65	67, 68
Material	Stainless Steel		Steel	Brass		Stainless Steel	
Temperature, °F (°C)	Working Pressure, psig (bar)						
–20 (–28) to 100 (37)	2200 (151)	1500 (103)	2200 (151)	2000 (137)	1500 (103)	1000 (68.9)	500 (34.4)
150 (65)	1850 (127)	1210 (83.3)	1850 (127)	1680 (115)	1260 (86.8)	1000 (68.9)	500 (34.4)
200 (93)	1500 (103)	930 (64.0)	1500 (103)	1360 (93.7)	1030 (70.9)	1000 (68.9)	500 (34.4)
250 (121)	1150 (79.2)	880 (60.6)	1150 (79.2)	1050 (72.3)	800 (55.1)	1000 (68.9)	500 (34.4)
300 (148)	800 (55.1)	780 (53.7)	800 (55.1)	780 (53.7)	560 (38.5)	800 (55.1)	500 (34.4)
350 (176)	560 (38.5)	560 (38.5)	560 (38.5)	410 (28.2)	330 (22.7)	560 (38.5)	500 (34.4)
400 (204)	330 (22.7)	330 (22.7)	330 (22.7)	100 (6.8)	100 (6.8)	330 (22.7)	330 (22.7)
450 (232)	100 (6.8)	100 (6.8)	100 (6.8)	—	—	100 (6.8)	100 (6.8)

Ratings based on reinforced PTFE seats and packings and alloy X-750 stem bearings on stainless steel or steel, PEEK stem bearings on brass, and fluorocarbon FKM O-rings.

Fastener materials: 316 SS on stainless steel valves and carbon steel grade 8 on steel or brass valves.

Steel valves with Swagelok tube fitting end connections: 375°F (190°C) max.

Alloy X-750 Seats (60M Series)

Flow Pattern	On-Off (2-Way)			
Series	63, 65	67, 68	63, 65	67, 68
Material	Stainless Steel		Steel	
Temperature, °F (°C)	Working Pressure, psig (bar)			
–20 (–28) to 350 (176)	1000 (68.9)	500 (34.4)	1000 (68.9)	500 (34.4)
400 (204)	970 (66.8)	500 (34.4)	1000 (68.9)	500 (34.4)
450 (232)	800 (55.1)	500 (34.4)	800 (55.1)	500 (34.4)

Ratings based on alloy X-750 seats and stem bearings, reinforced PTFE packings, and fluorocarbon FKM O-rings.

Fastener materials: 316 SS on stainless steel valves and carbon steel grade 8 on steel valves.

Steel valves with Swagelok tube fitting end connections: 375°F (190°C) max.

Carbon/Glass PTFE Seats (60C Series)

Flow Pattern	On-Off (2-Way)								Switching (3-Way)	
Series	62	W63, W65	63, 65	67, 68	62, 63, 65	67, 68	62	63, 65	62, 63, 65	67, 68
Material	Stainless Steel				Steel		Brass		Stainless Steel	
Temperature, °F (°C)	Working Pressure, psig (bar)									
–20 (–28) to 100 (37)	2500 (172)	2500 (172)	2500 (172)	1500 (103)	2500 (172)	2200 (151)	2000 (137)	1500 (103)	1000 (68.9)	500 (34.4)
150 (65)	2430 (167)	2500 (172)	2030 (139)	1210 (83.3)	2250 (155)	1960 (135)	1680 (115)	1260 (86.8)	1000 (68.9)	500 (34.4)
200 (93)	1870 (128)	2000 (137)	1560 (107)	930 (64.0)	2000 (137)	1760 (121)	1360 (93.7)	1030 (70.9)	1000 (68.9)	500 (34.4)
250 (121)	1620 (111)	1620 (111)	1480 (101)	880 (60.6)	1620 (111)	1570 (108)	1050 (72.3)	800 (55.1)	1000 (68.9)	500 (34.4)
300 (148)	1240 (85.4)	1240 (85.4)	1240 (85.4)	780 (53.7)	1240 (85.4)	1240 (85.4)	730 (50.2)	560 (38.5)	1000 (68.9)	500 (34.4)
350 (176)	860 (59.2)	860 (59.2)	860 (59.2)	680 (46.8)	860 (59.2)	860 (59.2)	410 (28.2)	330 (22.7)	860 (59.2)	500 (34.4)
400 (204)	480 (33.0)	480 (33.0)	480 (33.0)	480 (33.0)	480 (33.0)	480 (33.0)	100 (6.8)	100 (6.8)	480 (33.0)	480 (33.0)
450 (232)	100 (6.8)	100 (6.8)	100 (6.8)	100 (6.8)	100 (6.8)	100 (6.8)	—	—	100 (6.8)	100 (6.8)

Ratings based on carbon/glass PTFE seats, reinforced PTFE packings, and alloy X-750 stem bearings on stainless steel or steel; PEEK stem bearings on brass; and fluorocarbon FKM O-rings.

Fastener materials: 316 SS on stainless steel valves and carbon steel grade 8 on steel or brass valves.

Steel valves with Swagelok tube fitting end connections: 375°F (190°C) max.

Pressure-Temperature Ratings

PEEK Seats (60P Series)

Flow Pattern	On-Off (2-Way)						Switching (3-Way)		
Series	62	63, 65	67, 68	62	63, 65	67, 68	62	63, 65	67, 68
Material	Stainless Steel			Steel			Stainless Steel		
Temperature, °F (°C)	Working Pressure, psig (bar)								
–20 (–28) to 100 (37)	3000 (206)	2500 (172)	1500 (103)	3000 (206)	2500 (172)	2200 (151)	1000 (68.9)	1000 (68.9)	500 (34.4)
150 (65)	2420 (166)	2030 (139)	1210 (83.3)	2250 (155)	2250 (155)	1960 (135)	1000 (68.9)	1000 (68.9)	500 (34.4)
200 (93)	1870 (128)	1560 (107)	930 (64.0)	2010 (138)	2010 (138)	1760 (121)	1000 (68.9)	1000 (68.9)	500 (34.4)
250 (121)	1770 (121)	1480 (101)	880 (60.6)	1770 (121)	1770 (121)	1570 (108)	1000 (68.9)	1000 (68.9)	500 (34.4)
300 (148)	1600 (110)	1310 (90.2)	780 (53.7)	1520 (104)	1520 (104)	1370 (94.3)	1000 (68.9)	1000 (68.9)	500 (34.4)
350 (176)	1430 (98.5)	1140 (78.5)	690 (47.5)	1280 (88.1)	1280 (88.1)	1180 (81.3)	1000 (68.9)	1000 (68.9)	500 (34.4)
400 (204)	1260 (86.8)	970 (66.8)	590 (40.6)	1040 (71.6)	1040 (71.6)	990 (68.2)	1000 (68.9)	970 (66.8)	500 (34.4)
450 (232)	800 (55.1)	800 (55.1)	500 (34.4)	800 (55.1)	800 (55.1)	800 (55.1)	800 (55.1)	800 (55.1)	500 (34.4)

Ratings based on PEEK seats, packings, and stem bearings, and fluorocarbon FKM quad-seal flange seals.

Fastener materials: 316 SS on stainless steel valves and carbon steel grade 8 on steel valves.

Steel valves with Swagelok tube fitting end connections: 375°F (190°C) max.

Polyethylene Seats (60E Series)

Flow Pattern	On-Off (2-Way)								Switching (3-Way)	
Series	62, W63, W65	63, 65	67, 68	62	63, 65	67, 68	62	63, 65	62, 63, 65	67, 68
Material	Stainless Steel			Steel			Brass		Stainless Steel	
Temperature, °F (°C)	Working Pressure, psig (bar)									
–20 (–28) to 100 (37)	3000 (206)	2500 (172)	1500 (103)	3000 (206)	2500 (172)	2200 (151)	2000 (137)	1500 (103)	1000 (68.9)	500 (34.4)
150 (65)	2080 (143)	2030 (139)	1210 (83.3)	2080 (143)	2030 (139)	1960 (135)	1680 (115)	1260 (86.8)	1000 (68.9)	500 (34.4)
200 (93)	1160 (79.9)	1160 (79.9)	930 (64.0)	1160 (79.9)	1160 (79.9)	1160 (79.9)	1160 (79.9)	1030 (70.9)	1000 (68.9)	500 (34.4)
250 (121)	250 (17.2)	250 (17.2)	250 (17.2)	250 (17.2)	250 (17.2)	250 (17.2)	250 (17.2)	250 (17.2)	250 (17.2)	250 (17.2)

Ratings based on UHMWPE seats and packings, PEEK stem bearings, and ethylene propylene O-rings.

Fastener materials: 316 SS on stainless steel valves and carbon steel grade 8 on steel or brass valves.

Steel valves with Swagelok tube fitting end connections: 375°F (190°C) max.

Virgin PTFE Seats (60V Series)

Flow Pattern	On-Off (2-Way)					Switching (3-Way)	
Series	62, 63, 65, W63, W65	67, 68	62, 63, 65, 67, 68	62	63, 65	62, 63, 65	67, 68
Material	Stainless Steel		Steel	Brass		Stainless Steel	
Temperature, °F (°C)	Working Pressure, psig (bar)						
–20 (–28) to 100 (37)	1500 (103)	1500 (103)	1500 (103)	1500 (103)	1500 (103)	1000 (68.9)	500 (34.4)
150 (65)	1500 (103)	1210 (83.3)	1500 (103)	1500 (103)	1260 (86.8)	1000 (68.9)	500 (34.4)
200 (93)	1500 (103)	930 (64.0)	1500 (103)	1360 (93.7)	1030 (70.9)	1000 (68.9)	500 (34.4)
250 (121)	1150 (79.2)	880 (60.6)	1150 (79.2)	1050 (72.3)	800 (55.1)	1000 (68.9)	500 (34.4)
300 (148)	800 (55.1)	780 (53.7)	800 (55.1)	730 (50.2)	560 (38.5)	800 (55.1)	500 (34.4)
350 (176)	560 (38.5)	560 (38.5)	560 (38.5)	410 (28.2)	330 (22.7)	560 (38.5)	500 (34.4)
400 (204)	330 (22.7)	330 (22.7)	330 (22.7)	100 (6.8)	100 (6.8)	330 (22.7)	330 (22.7)
450 (232)	100 (6.8)	100 (6.8)	100 (6.8)	—	—	100 (6.8)	100 (6.8)

Ratings based on virgin PTFE seats and packings and alloy X-750 stem bearings on stainless steel or steel, PEEK stem bearings on brass, and fluorocarbon FKM O-rings.

Fastener materials: 316 SS on stainless steel valves and carbon steel grade 8 on steel or brass valves.

Steel valves with Swagelok tube fitting end connections: 375°F (190°C) max.

Ordering Information

On-Off (2-Way) Valves

Select an ordering number from the **Dimensions** tables starting on page 9.

See the table at right for availability of other valve body materials. To order, replace **SS** with **B** or **S.**

Examples: **B**-62TS4
S-62TS4

Valve Body Material	Designator	Availability
316 SS	SS	Not available in chlorine series
Brass	B	2-way 62, 63, 65 series only; not available in steam, thermal, fire, chlorine, all-welded, PEEK-seated, or rapid-cycle service valves
Carbon steel	S	2-way only; required in chlorine series

Additional Seat Materials

Most valve ordering numbers specify reinforced PTFE seat material. For other seat materials, replace **T** with the desired designator. Not all seat material and flange seal combinations are available. Contact your authorized Swagelok representative.

Examples: SS-62**P**S4
S-62**E**S4

Seat Material	Designator	Availability
Reinforced PTFE	T	Not available in steam, thermal, or chlorine series
Alloy X-750	M	Not available in steam, fire, chlorine, or all-welded series; required in thermal series
Carbon/glass PTFE	C	Not available in steam, thermal, or chlorine series
PEEK	P	Not available in fire, thermal, chlorine, brass, or all-welded series; required in steam series
UHMWPE	E	Not available in steam, fire, thermal, or chlorine series
Virgin PTFE	V	Not available in steam, fire, or thermal series; required in chlorine series

Additional Flange Seal Materials

Fluorocarbon FKM is standard. For other materials, add a flange seal material designator to the valve ordering number. Not all flange seal and seat material combinations are available. Contact your authorized Swagelok representative.

Examples: SS-62TS4**-B**
S-62ES4**-IN**

Flange Seal Material	Designator	Temperature Range °F (°C)
Alloy X-750, PTFE coated①	IN	–65 to 450 (–53 to 232)
Buna N	B	–20 to 250 (–28 to 121)
Buna C①	BC	–65 to 250 (–53 to 121)
Ethylene propylene	E	–20 to 250 (–28 to 121)
Neoprene	N	–20 to 250 (–28 to 121)
PTFE	T	50 to 150 (10 to 65)

① 62, 63, and 65 series valves only.

Switching (3-Way) Valves

Switching (3-way) valves are available with:

- stainless steel valve body material
- standard or low-temperature service
- all seat materials except alloy X-750
- bottom end connections shown below at right.

To order a switching (3-way) valve with three of the **same end connections,** insert **X** into the valve ordering number.

Example: SS-62**X**TF4

To order a switching (3-way) valve with a **different bottom end connection,** insert **X** into the valve ordering number and add a bottom end connection designator.

Example: SS-62**X**TF4**-S4**

To order **three different end connections,** contact your authorized Swagelok representative.

To order a switching (3-way) valve with **an L flow pattern,** contact your authorized Swagelok representative.

Cross-Port Mixing of Fluids

A spherical ball is available in valves with UHMWPE or PEEK seats to prevent cross-port mixing of fluids. To order, insert **O** into the ordering number.

Example: SS-62X**O**PF4

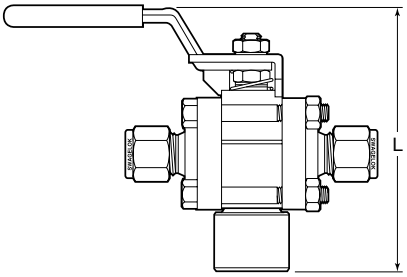

Valve Series	Bottom End Connection	Designator	L in. (mm)
62	1/4 in. female NPT 1/4 in. female ISO tapered 1/4 in. Swagelok tube fitting	-F4 -F4RT -S4	3.12 (79.2) 3.12 (79.2) 3.35 (85.1)
63	3/8 in. Swagelok tube fitting 1/2 in. female NPT 1/2 in. female ISO tapered 1/2 in. Swagelok tube fitting	-S6 -F8 -F8RT -S8	4.37 (111) 4.19 (106) 4.19 (106) 4.48 (114)
65	3/4 in. female NPT 3/4 in. female ISO tapered 1 in. female NPT 1 in. female ISO tapered	-F12 -F12RT -F16 -F16RT	5.45 (138)
67	1 1/2 in. female NPT	-F24	6.86 (174)
68	2 in. female NPT	-F32	7.21 (183)

Dimensions

Dimensions, in inches (millimeters), are for reference only and are subject to change.

Swagelok Tube Fitting End Connections

Dimensions shown with Swagelok nuts finger-tight. See **Ordering Information,** page 8.

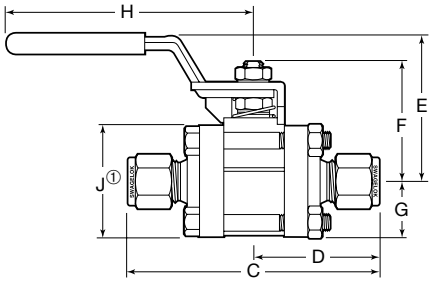

Size	Ordering Number	Orifice in. (mm)	C_v	Dimensions, in. (mm)						
				C	D	E	F	G	H	J①
1/4 in.	SS-62TS4	0.188 (4.8)	1.2	3.17 (80.5)	1.59 (40.4)	1.66 (42.2)	1.26 (32.0)	0.68 (17.3)	2.37 (60.2)	1.35 (34.3)
3/8 in.	SS-62TS6	0.281 (7.1)	3.8	3.17 (80.5)	1.59 (40.4)	1.66 (42.2)	1.26 (32.0)	0.68 (17.3)	2.37 (60.2)	1.35 (34.3)
1/2 in.	SS-63TS8	0.406 (10.3)	7.5	4.04 (103)	2.02 (51.3)	2.35 (59.7)	1.79 (45.5)	0.89 (22.6)	4.50 (114)	1.78 (45.2)
3/4 in.	SS-63TS12	0.516 (13.1)	13.6	4.04 (103)	2.02 (51.3)	2.35 (59.7)	1.79 (45.5)	0.89 (22.6)	4.50 (114)	1.78 (45.2)
1 in.	SS-65TS16	0.875 (22.2)	40	5.36 (136)	2.68 (68.1)	2.94 (74.7)	2.52 (64.0)	1.25 (31.8)	6.00 (152)	2.50 (63.5)
1 1/2 in.	SS-67TS24	1.250 (31.8)	100	7.59 (193)	3.79 (96.3)	4.03 (102)	3.14 (79.8)	1.53 (38.9)	9.14 (232)	3.06 (77.7)
2 in.	SS-68TS32	1.500 (38.1)	130	9.95 (253)	4.97 (126)	4.16 (106)	3.36 (85.3)	1.74 (44.2)	9.14 (232)	3.47 (88.1)
6 mm	SS-62TS6MM	0.188 (4.8)	1.2	3.17 (80.5)	1.59 (40.4)	1.66 (42.2)	1.26 (32.0)	0.68 (17.3)	2.37 (60.2)	1.35 (34.3)
8 mm	SS-62TS8MM	0.250 (6.4)	2.5	3.17 (80.5)	1.59 (40.4)	1.66 (42.2)	1.26 (32.0)	0.68 (17.3)	2.37 (60.2)	1.35 (34.3)
10 mm	SS-62TS10MM	0.281 (7.1)	3.8	3.20 (81.3)	1.60 (40.6)	1.66 (42.2)	1.26 (32.0)	0.68 (17.3)	2.37 (60.2)	1.35 (34.3)
12 mm	SS-63TS12MM	0.375 (9.5)	7.5	4.04 (103)	2.02 (51.3)	2.35 (59.7)	1.79 (45.5)	0.89 (22.6)	4.50 (114)	1.78 (45.2)
18 mm	SS-63TS18MM	0.516 (13.1)	13.6	4.04 (103)	2.02 (51.3)	2.35 (59.7)	1.79 (45.5)	0.89 (22.6)	4.50 (114)	1.78 (45.2)
25 mm	SS-65TS25MM	0.875 (22.2)	40	5.36 (136)	2.68 (68.1)	2.94 (74.7)	2.52 (64.0)	1.25 (31.8)	6.00 (152)	2.50 (63.5)

All 67 and 68 stainless steel steam and thermal series valves and 67 and 68 series valves with UHMWPE seats are assembled with silver-plated front ferrules. All other 67 and 68 series stainless steel valves are assembled with PFA-coated front ferrules.

① Height and width of 63 through 68 series flanges. Height of 62 series flange is 1.59 in. (40.4 mm); width is J dimension.

Swagelok Hydraulic Swaging Unit

When installing a Swagelok 60 series ball valve with tube fittings larger than 1 in., the Swagelok MHSU hydraulic swaging unit is needed. The unit swages the ferrules onto the tubing without applying stress to fitting body threads. See the Swagelok *Gaugeable Tube Fittings and Adapter Fittings* catalog, MS-01-140, for more information.

Dimensions

Female Pipe Thread End Connections

Female NPT pipe thread dimensions conform to ASME B1.20.1. ISO tapered thread dimensions conform to ISO 7/1, EN 10226-1, DIN 2999, and JIS B0203. See **Ordering Information,** page 8.

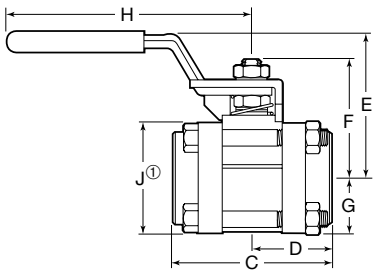

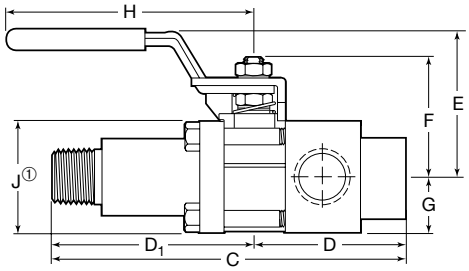

Size	Ordering Number	Orifice in. (mm)	C_v	Dimensions, in. (mm)							
				C	D	D_1	E	F	G	H	J①
Female NPT											
1/8 in.	SS-62TF2	0.281 (7.1)	3.8	2.16 (54.9)	1.08 (27.4)	—	1.66 (42.2)	1.26 (32.0)	0.68 (17.3)	2.37 (60.2)	1.35 (34.3)
1/4 in.	SS-62TF4	0.281 (7.1)	3.8	2.16 (54.9)	1.08 (27.4)	—	1.66 (42.2)	1.26 (32.0)	0.68 (17.3)	2.37 (60.2)	1.35 (34.3)
3/8 in.	SS-63TF6	0.516 (13.1)	12	2.70 (68.6)	1.35 (34.3)	—	2.35 (59.7)	1.79 (45.5)	0.89 (22.6)	4.50 (114)	1.78 (45.2)
1/2 in.	SS-63TF8	0.516 (13.1)	12	2.70 (68.6)	1.35 (34.3)	—	2.35 (59.7)	1.79 (45.5)	0.89 (22.6)	4.50 (114)	1.78 (45.2)
3/4 in.	SS-65TF12	0.875 (22.2)	31	3.59 (91.2)	1.80 (45.7)	—	2.94 (74.7)	2.52 (64.0)	1.25 (31.8)	6.00 (152)	2.50 (63.5)
1 in.	SS-65TF16	0.875 (22.2)	38	3.59 (91.2)	1.80 (45.7)	—	2.94 (74.7)	2.52 (64.0)	1.25 (31.8)	6.00 (152)	2.50 (63.5)
1 1/4 in.	SS-67TF20	1.250 (31.8)	90	4.39 (112)	2.19 (55.6)	—	4.03 (102)	3.14 (79.8)	1.53 (38.9)	9.14 (232)	3.06 (77.7)
1 1/2 in.	SS-67TF24	1.250 (31.8)	100	4.39 (112)	2.19 (55.6)	—	4.03 (102)	3.14 (79.8)	1.53 (38.9)	9.14 (232)	3.06 (77.7)
2 in.	SS-68TF32	1.500 (38.1)	130	4.94 (125)	2.47 (62.7)	—	4.16 (106)	3.36 (85.3)	1.74 (44.2)	9.14 (232)	3.47 (88.1)
Female ISO Tapered											
1/4 in.	SS-62TF4RT	0.281 (7.1)	3.8	2.16 (54.9)	1.08 (27.4)	—	1.66 (42.2)	1.26 (32.0)	0.68 (17.3)	2.37 (60.2)	1.35 (34.3)
1/2 in.	SS-63TF8RT	0.516 (13.1)	12	2.70 (68.6)	1.35 (34.3)	—	2.35 (59.7)	1.79 (45.5)	0.89 (22.6)	4.50 (114)	1.78 (45.2)
3/4 in.	SS-65TF12RT	0.875 (22.2)	31	3.59 (91.2)	1.80 (45.7)	—	2.94 (74.7)	2.52 (64.0)	1.25 (31.8)	6.00 (152)	2.50 (63.5)
1 in.	SS-65TF16RT	0.875 (22.2)	38	4.45 (113)	2.23 (56.6)	—	2.94 (74.7)	2.52 (64.0)	1.25 (31.8)	6.00 (152)	2.50 (63.5)
1 1/2 in.	SS-67TF24RT	1.250 (31.8)	100	5.45 (138)	2.72 (69.1)	—	4.03 (102)	3.14 (79.8)	1.53 (38.9)	9.14 (232)	3.06 (77.7)
2 in.	SS-68TF32RT	1.500 (38.1)	130	7.00 (178)	3.50 (88.9)	—	4.29 (109)	3.36 (85.3)	1.74 (44.2)	9.14 (232)	3.47 (88.1)
Male Lagging Extension to Female NPT with Gauge Ports											
1/2 to 1/2 in.	SS-63TM8L-GF8	0.411 (10.4)	7.5	5.44 (138)	2.34 (59.4)	3.09 (78.5)	2.35 (59.7)	1.79 (45.5)	0.89 (22.6)	4.50 (114)	1.78 (45.2)
3/4 to 1/2 in.	SS-63TM12L-GF8	0.500 (12.7)	11.3	5.44 (138)	2.34 (59.4)	3.09 (78.5)	2.35 (59.7)	1.79 (45.5)	0.89 (22.6)	4.50 (114)	1.78 (45.2)

① Height and width of 63 through 68 series flanges. Height of 62 series flange is 1.59 in. (40.4 mm); width is J dimension.

Steam Trap Test Assembly

Designed for use with saturated steam systems, the Swagelok TVA series integrated test valve assembly consists of two 63 series ball valves and a universal mount for use with a customer-supplied steam trap. The test assembly offers fast visual monitoring of condensate removal with a simple quarter turn of the test valve.

See the Swagelok *Steam Trap Test Station with Universal Mount* catalog, MS-02-221, for more information.

Dimensions

Tube and Pipe Socket Weld End Connections

Pipe socket diameter and depth conform to ASME B16.11. See **Ordering Information,** page 8.

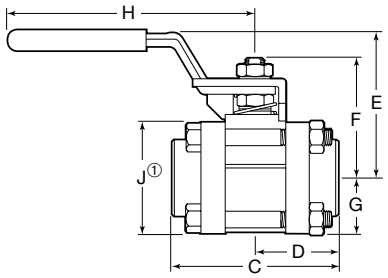

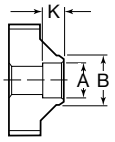

Tube Socket Weld

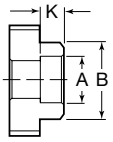

Pipe Socket Weld

Size	Ordering Number	Orifice in. (mm)	C_v	Dimensions, in. (mm)									
				A	B	C	D	E	F	G	H	J①	K
Tube Socket Weld													
1/4 in.	SS-62TSW4T	0.188 (4.8)	1.2	0.257 (6.5)	0.540 (13.7)	2.16 (54.9)	1.08 (27.4)	1.66 (42.2)	1.26 (32.0)	0.68 (17.3)	2.37 (60.2)	1.35 (34.3)	0.28 (7.1)
3/8 in.	SS-62TSW6T	0.281 (7.1)	3.8	0.382 (9.7)	0.675 (17.1)	2.16 (54.9)	1.08 (27.4)	1.66 (42.2)	1.26 (32.0)	0.68 (17.3)	2.37 (60.2)	1.35 (34.3)	0.31 (7.9)
1/2 in.	SS-63TSW8T	0.411 (10.4)	7.5	0.507 (12.9)	0.840 (21.3)	2.70 (68.6)	1.34 (34.0)	2.35 (59.7)	1.79 (45.5)	0.89 (22.6)	4.50 (114)	1.78 (45.2)	0.38 (9.7)
3/4 in.	SS-63TSW12T	0.516 (13.1)	13.6	0.757 (19.2)	1.050 (26.7)	2.70 (68.6)	1.34 (34.0)	2.35 (59.7)	1.79 (45.5)	0.89 (22.6)	4.50 (114)	1.78 (45.2)	0.44 (11.2)
1 in.	SS-65TSW16T	0.875 (22.2)	40	1.009 (25.6)	1.315 (33.4)	3.59 (91.2)	1.80 (45.7)	2.94 (74.7)	2.52 (64.0)	1.25 (31.8)	6.00 (152)	2.50 (63.5)	0.62 (15.7)
1 1/4 in.	SS-67TSW20T	1.125 (28.6)	80	1.259 (32.0)	1.660 (42.2)	4.39 (112)	2.19 (55.6)	4.03 (102)	3.14 (79.8)	1.53 (38.9)	9.14 (232)	3.06 (77.7)	0.62 (15.7)
1 1/2 in.	SS-67TSW24T	1.250 (31.8)	100	1.509 (38.3)	2.450 (62.2)	4.39 (112)	2.19 (55.6)	4.03 (102)	3.14 (79.8)	1.53 (38.9)	9.14 (232)	3.06 (77.7)	0.75 (19.1)
2 in.	SS-68TSW32T	1.500 (38.1)	130	2.012 (51.1)	2.760 (70.1)	4.94 (125)	2.47 (62.7)	4.16 (106)	3.36 (85.3)	1.74 (44.2)	9.14 (232)	3.47 (88.1)	0.75 (19.1)
Pipe Socket Weld													
1/2 in.	SS-63TSW8P	0.516 (13.1)	15	0.860 (21.8)	1.228 (31.2)	2.70 (68.6)	1.34 (34.0)	2.35 (59.7)	1.79 (45.5)	0.89 (22.6)	4.50 (114)	1.78 (45.2)	0.38 (9.7)
3/4 in.	SS-65TSW12P	0.875 (22.2)	36	1.070 (27.2)	1.660 (42.2)	3.59 (91.2)	1.80 (45.7)	2.94 (74.7)	2.52 (64.0)	1.25 (31.8)	6.00 (152)	2.50 (63.5)	0.50 (12.7)
1 in.	SS-65TSW16P	0.875 (22.2)	42	1.335 (33.9)	1.783 (45.3)	3.59 (91.2)	1.80 (45.7)	2.94 (74.7)	2.52 (64.0)	1.25 (31.8)	6.00 (152)	2.50 (63.5)	0.50 (12.7)
1 1/4 in.	SS-67TSW20P	1.250 (31.8)	90	1.680 (42.7)	2.450 (62.2)	4.51 (115)	2.25 (57.2)	4.03 (102)	3.14 (79.8)	1.53 (38.9)	9.14 (232)	3.06 (77.7)	0.50 (12.7)
1 1/2 in.	SS-67TSW24P	1.250 (31.8)	100	1.920 (48.8)	2.450 (62.2)	4.57 (116)	2.29 (58.2)	4.03 (102)	3.14 (79.8)	1.53 (38.9)	9.14 (232)	3.06 (77.7)	0.50 (12.7)
2 in.	SS-68TSW32P	1.500 (38.1)	130	2.411 (61.2)	2.957 (75.1)	4.94 (125)	2.47 (62.7)	4.16 (106)	3.36 (85.3)	1.70 (43.2)	9.14 (232)	3.41 (86.6)	0.63 (16.0)

① Height and width of 63 through 68 series flanges. Height of 62 series flange is 1.59 in. (40.4 mm); width is J dimension.

Swagelok Welding System

The Swagelok welding system offers consistent, repeatable orbital gas tungsten arc welds (GTAW). It can be used to weld a variety of weld end connections available on Swagelok 60 series ball valves.

See the *Swagelok Welding System M200 Power Supply* catalog, MS-02-342, for more information.

Dimensions

Pipe Butt Weld End Connections

Pipe butt weld end connections conform to ASME B16.25. See **Ordering Information,** page 8.

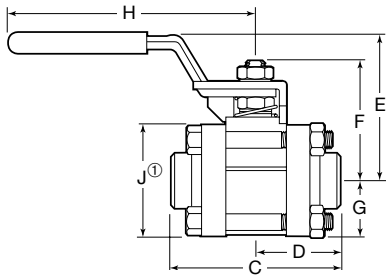

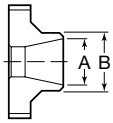

Size	Ordering Number	Orifice in. (mm)	C_v	Dimensions, in. (mm) A	B	C	D	E	F	G	H	J①
Schedule 10												
1/4 in.	SS-62TW4P10	0.188 (4.8)	1.2	0.410 (10.4)	0.540 (13.7)	2.08 (52.8)	1.04 (26.4)	1.66 (42.2)	1.26 (32.0)	0.68 (17.3)	2.37 (60.2)	1.35 (34.3)
1/2 in.	SS-63TW8P10	0.516 (13.1)	15	0.674 (17.1)	0.840 (21.3)	2.69 (68.3)	1.34 (34.0)	2.35 (59.7)	1.79 (45.5)	0.89 (22.6)	4.50 (114)	1.78 (45.2)
3/4 in.	SS-65TW12P10	0.875 (22.2)	36	0.884 (22.5)	1.050 (26.7)	3.59 (91.2)	1.80 (45.7)	2.94 (74.7)	2.52 (64.0)	1.25 (31.8)	6.00 (152)	2.50 (63.5)
1 in.	SS-65TW16P10	0.875 (22.2)	40	1.097 (27.9)	1.315 (33.4)	3.46 (87.9)	1.73 (43.9)	2.94 (74.7)	2.52 (64.0)	1.25 (31.8)	6.00 (152)	2.50 (63.5)
1 1/2 in.	SS-67TW24P10	1.250 (31.8)	100	1.682 (42.7)	1.900 (48.3)	4.47 (114)	2.23 (56.6)	4.03 (102)	3.14 (79.8)	1.53 (38.9)	9.14 (232)	3.06 (77.7)
2 in.	SS-68TW32P10	1.500 (38.1)	130	2.157 (54.8)	2.375 (60.3)	4.78 (121)	2.39 (60.7)	4.16 (106)	3.36 (85.3)	1.74 (44.2)	9.14 (232)	3.47 (88.1)
Schedule 40												
1/4 in.	SS-62TW4P40	0.188 (4.8)	1.2	0.364 (9.2)	0.540 (13.7)	2.08 (52.8)	1.04 (26.4)	1.66 (42.2)	1.26 (32.0)	0.68 (17.3)	2.37 (60.2)	1.35 (34.3)
1/2 in.	SS-63TW8P40	0.516 (13.1)	15	0.622 (15.8)	0.840 (21.3)	2.69 (68.3)	1.34 (34.0)	2.35 (59.7)	1.79 (45.5)	0.89 (22.6)	4.50 (114)	1.78 (45.2)
3/4 in.	SS-65TW12P40	0.824 (20.9)	36	0.824 (20.9)	1.050 (26.7)	3.59 (91.2)	1.80 (45.7)	2.94 (74.7)	2.52 (64.0)	1.25 (31.8)	6.00 (152)	2.50 (63.5)
1 in.	SS-65TW16P40	0.875 (22.2)	90	1.049 (26.6)	1.315 (33.4)	3.46 (87.9)	1.73 (43.9)	2.94 (74.7)	2.52 (64.0)	1.25 (31.8)	6.00 (152)	2.50 (63.5)
1 1/2 in.	SS-67TW24P40	1.250 (31.8)	100	1.610 (40.9)	1.900 (48.3)	4.47 (114)	2.23 (56.6)	4.03 (102)	3.14 (79.8)	1.53 (38.9)	9.14 (232)	3.06 (77.7)
2 in.	SS-68TW32P40	1.500 (38.1)	130	2.067 (52.5)	2.375 (60.3)	4.86 (123)	2.43 (61.7)	4.16 (106)	3.36 (85.3)	1.74 (44.2)	9.14 (232)	3.47 (88.1)
Schedule 80												
1/4 in.	SS-62TW4P80	0.188 (4.8)	1.2	0.302 (7.7)	0.540 (13.7)	2.08 (52.8)	1.04 (26.4)	1.66 (42.2)	1.26 (32.0)	0.68 (17.3)	2.37 (60.2)	1.35 (34.3)
3/8 in.	SS-62TW6P80	0.281 (7.1)	3.8	0.423 (10.7)	0.675 (17.1)	2.08 (52.8)	1.04 (26.4)	1.66 (42.2)	1.26 (32.0)	0.68 (17.3)	2.37 (60.2)	1.35 (34.3)
1/2 in.	SS-63TW8P80	0.516 (13.1)	6.8	0.546 (13.9)	0.840 (21.3)	2.69 (68.3)	1.34 (34.0)	2.35 (59.7)	1.79 (45.5)	0.89 (22.6)	4.50 (114)	1.78 (45.2)
3/4 in.	SS-63TW12P80	0.516 (13.1)	13.6	0.742 (18.8)	1.050 (26.7)	2.69 (68.3)	1.34 (34.0)	2.35 (59.7)	1.79 (45.5)	0.89 (22.6)	4.50 (114)	1.78 (45.2)
1 in.	SS-65TW16P80	0.875 (22.2)	40	0.942 (23.9)	1.315 (33.4)	3.46 (87.9)	1.73 (43.9)	2.94 (74.7)	2.52 (64.0)	1.25 (31.8)	6.00 (152)	2.50 (63.5)
1 1/4 in.	SS-67TW20P80	1.125 (28.6)	80	1.281 (32.5)	1.660 (42.2)	4.57 (116)	2.28 (57.9)	4.03 (102)	3.14 (79.8)	1.53 (38.9)	9.14 (232)	3.06 (77.7)
1 1/2 in.	SS-67TW24P80	1.250 (31.8)	100	1.500 (38.1)	1.900 (48.3)	4.57 (116)	2.28 (57.9)	4.03 (102)	3.14 (79.8)	1.53 (38.9)	9.14 (232)	3.06 (77.7)
2 in.	SS-68TW32P80	1.500 (38.1)	130	1.939 (49.3)	2.375 (60.3)	5.09 (129)	2.55 (64.8)	4.16 (106)	3.36 (85.3)	1.74 (44.2)	9.14 (232)	3.47 (88.1)

① Height and width of 63 through 68 series flanges. Height of 62 series flange is 1.59 in. (40.4 mm); width is J dimension.

Dimensions

Tube Extension End Connections

Tube extensions are available on stainless steel valves only. Tube extension material is 316L SS. See **Ordering Information,** page 8.

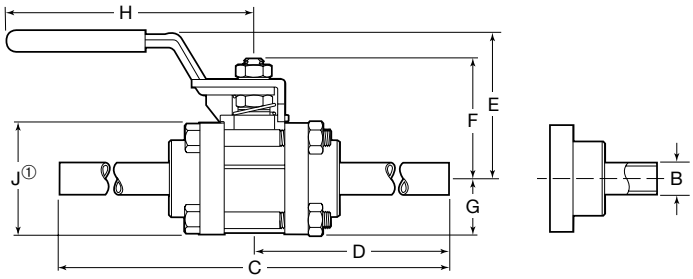

Size	Wall Thickness	Ordering Number	Orifice in. (mm)	C_v	Dimensions, in. (mm)							
					B	C	D	E	F	G	H	J①
1/4 in.	0.035 in.	SS-62TW4T35-3	0.180 (4.6)	1.1	0.250 (6.4)	8.12 (206)	4.05 (103)	1.66 (42.2)	1.26 (32.0)	0.68 (17.3)	2.37 (60.2)	1.35 (34.3)
3/8 in.	0.035 in.	SS-62TW6T35-3	0.281 (7.1)	3.8	0.375 (9.5)	8.12 (206)	4.05 (103)	1.66 (42.2)	1.26 (32.0)	0.68 (17.3)	2.37 (60.2)	1.35 (34.3)
1/2 in.	0.049 in.	SS-63TW8T49-3	0.402 (10.2)	7.2	0.500 (12.7)	8.51 (216)	4.26 (108)	2.35 (59.7)	1.79 (45.5)	0.89 (22.6)	4.50 (114)	1.78 (45.2)
1/2 in.	0.065 in.	SS-63TW8T65-3	0.370 (9.4)	6.1	0.500 (12.7)	8.51 (216)	4.26 (108)	2.35 (59.7)	1.79 (45.5)	0.89 (22.6)	4.50 (114)	1.78 (45.2)
3/4 in.	0.065 in.	SS-65TW12T65-3	0.620 (15.7)	18	0.750 (19.1)	9.53 (242)	4.77 (121)	2.94 (74.7)	2.52 (64.0)	1.25 (31.8)	6.00 (152)	2.50 (63.5)
1 in.	0.065 in.	SS-65TW16T65-3	0.870 (22.1)	36	1.000 (25.4)	9.53 (242)	4.77 (121)	2.94 (74.7)	2.52 (64.0)	1.25 (31.8)	6.00 (152)	2.50 (63.5)
1 1/2 in.	0.065 in.	SS-67TW24T65-3	1.250 (31.8)	100	1.500 (38.1)	10.5 (267)	5.27 (134)	4.03 (102)	3.14 (79.8)	1.53 (38.9)	9.14 (232)	3.06 (77.7)
2 in.	0.065 in.	SS-68TW32T65-3	1.500 (38.1)	130	2.000 (50.8)	11.3 (287)	5.65 (144)	4.16 (106)	3.36 (85.3)	1.74 (44.2)	9.14 (232)	3.47 (88.1)

① Height and width of 63 through 68 series flanges. Height of 62 series flange is 1.59 in. (40.4 mm); width is J dimension.

VCO O-Ring Face Seal and VCR Metal Gasket Face Seal Fitting End Connections

Face seal fitting end connections require minimal axial clearance for ease of installation and service. VCO fitting contains fluorocarbon FKM O-ring. See **Ordering Information,** page 8.

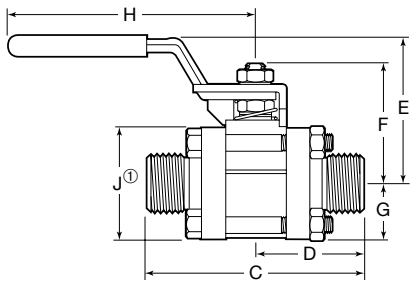

Size	Ordering Number	Orifice in. (mm)	C_v	Dimensions, in. (mm)						
				C	D	E	F	G	H	J①
VCO O-Ring Face Seal Fitting										
1/4 in.	SS-62TVCO4	0.188 (4.8)	1.2	2.60 (66.0)	1.30 (33.0)	1.66 (42.2)	1.26 (32.0)	0.68 (17.3)	2.37 (60.2)	1.35 (34.3)
1/2 in.	SS-63TVCO8	0.406 (10.3)	7.5	3.25 (82.6)	1.62 (41.1)	2.35 (59.7)	1.79 (45.5)	0.89 (22.6)	4.50 (114)	1.78 (45.2)
VCR Metal Gasket Face Seal Fitting										
1/4 in.	SS-62TVCR4	0.188 (4.8)	1.2	2.47 (62.7)	1.23 (31.2)	1.66 (42.2)	1.26 (32.0)	0.68 (17.3)	2.37 (60.2)	1.32 (33.5)
1/2 in.	SS-63TVCR8	0.406 (10.3)	7.5	3.63 (92.2)	1.81 (46.0)	2.35 (59.7)	1.79 (45.5)	0.89 (22.6)	4.50 (114)	1.75 (44.5)

Ratings of valves with VCR or VCO fitting end connections are affected by the ratings of the mating fitting; see the Swagelok *VCR Metal Gasket Face Seal Fittings* and Swagelok *VCO O-Ring Face Seal Fittings* catalogs, MS-01-24 and MS-01-28.

① Height and width of 63 series flange. Height of 62 series flange is 1.59 in. (40.4 mm); width is J dimension.

Dimensions

Sanitary Fitting End Connections

Valves with Swagelok TS and SC sanitary fitting end connections are available in stainless steel only. The maximum pressure rating is 300 psig (20.6 bar); working pressure and temperature ratings of these valves may be limited by the gasket material and clamp used.

TS sanitary fitting end connections have a machined surface finish roughness average (R_a) of 20 µin. (0.51 µm). For more information, see the Swagelok *Biopharm Fittings—TS Series* catalog, MS-03-13.

SC sanitary clamp end connections 1 in. and larger are compatible with ISO 2852 geometrical requirements.

See **Ordering Information,** page 8.

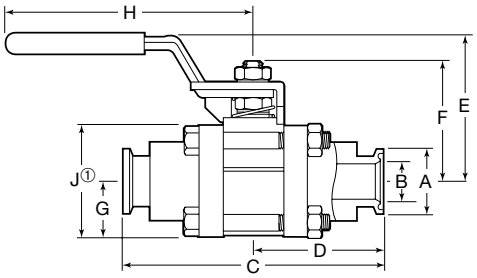

To order a valve with a ball inside diameter surface roughness average (R_a) of 15 µin. (0.38 µm), add **-RB** to the valve ordering number.

Example: SS-63TTS8**-RB**

TS Sanitary Fittings

Size	Ordering Number	Orifice in. (mm)	C_v	Dimensions, in. (mm)								
				A	B	C	D	E	F	G	H	J①
1/2 in.	SS-63TTS8	0.370 (9.4)	7.5	0.99 (25.1)	0.37 (9.4)	3.50 (88.9)	1.75 (44.4)	2.35 (59.7)	1.79 (45.5)	0.89 (22.6)	4.50 (114)	1.78 (45.2)
3/4 in.	SS-63TTS12	0.516 (13.1)	15	0.99 (25.1)	0.62 (15.7)	3.50 (88.9)	1.75 (44.4)	2.35 (59.7)	1.79 (45.5)	0.89 (22.6)	4.50 (114)	1.78 (45.2)
1 in.	SS-65TTS16	0.873 (22.2)	42	1.99 (50.5)	0.87 (22.1)	4.50 (114)	2.25 (57.2)	2.94 (74.7)	2.52 (64.0)	1.25 (31.8)	6.00 (152)	2.50 (63.5)
1 1/2 in.	SS-67TTS24	1.250 (31.8)	100	1.99 (50.5)	1.37 (34.8)	5.50 (140)	2.75 (69.9)	4.03 (102)	3.14 (79.8)	1.53 (38.9)	9.14 (232)	3.06 (77.7)
2 in.	SS-68TTS32	1.500 (38.1)	130	2.52 (64.0)	1.87 (47.5)	6.25 (159)	3.12 (79.2)	4.16 (106)	3.36 (85.3)	1.74 (44.2)	9.14 (232)	3.47 (88.1)

① Height and width of 63 through 68 series flanges. Height of 62 series flange is 1.59 in. (40.4 mm); width is J dimension.

SC Sanitary Clamp Fittings

Size	Ordering Number	Orifice in. (mm)	C_v	Dimensions, in. (mm)								
				A	B	C	D	E	F	G	H	J①
1/2 in.	SS-62TSC8	0.281 (7.1)	7.1	0.99 (25.1)	0.37 (9.4)	3.56 (90.4)	1.78 (45.2)	1.66 (42.2)	1.26 (32.0)	0.68 (17.3)	2.37 (60.2)	1.35 (34.3)
3/4 in.	SS-63TSC12	0.516 (13.1)	13.2	0.99 (25.1)	0.62 (15.7)	4.06 (103)	2.03 (51.5)	2.35 (59.7)	1.79 (45.5)	0.89 (22.6)	4.50 (114)	1.78 (45.2)
1 in.	SS-65TSC16	0.872 (22.1)	42	1.99 (50.5)	0.87 (22.1)	4.50 (114)	2.25 (57.2)	2.94 (74.7)	2.52 (64.0)	1.25 (31.8)	6.00 (152)	2.50 (63.5)
1 1/2 in.	SS-67TSC24	1.250 (31.8)	100	1.98 (50.3)	1.37 (34.8)	5.50 (140)	2.75 (69.9)	4.03 (102)	3.14 (79.8)	1.53 (38.9)	9.14 (232)	3.06 (77.7)
2 in.	SS-68TSC32	1.500 (38.1)	130	2.52 (64.0)	1.87 (47.5)	6.25 (159)	3.12 (79.2)	4.16 (106)	3.36 (85.3)	1.74 (44.2)	9.14 (232)	3.47 (88.1)

① Height and width of 63 through 68 series flanges. Height of 62 series flange is 1.59 in. (40.4 mm); width is J dimension.

Mixed End Connections

60 series valves can be ordered with two different end connections. Contact your authorized Swagelok representative for ordering information.

Special-Application Valves

Steam Service (S60P Series)

Steam service ball valves can reduce lost energy, downtime, and safety hazards associated with leaking valves in a steam system. Unlike conventional sealing methods, the patented designs of the seats and stem packing in the steam series ball valves resist the erosive nature of steam, thus improving performance and enhancing safety.

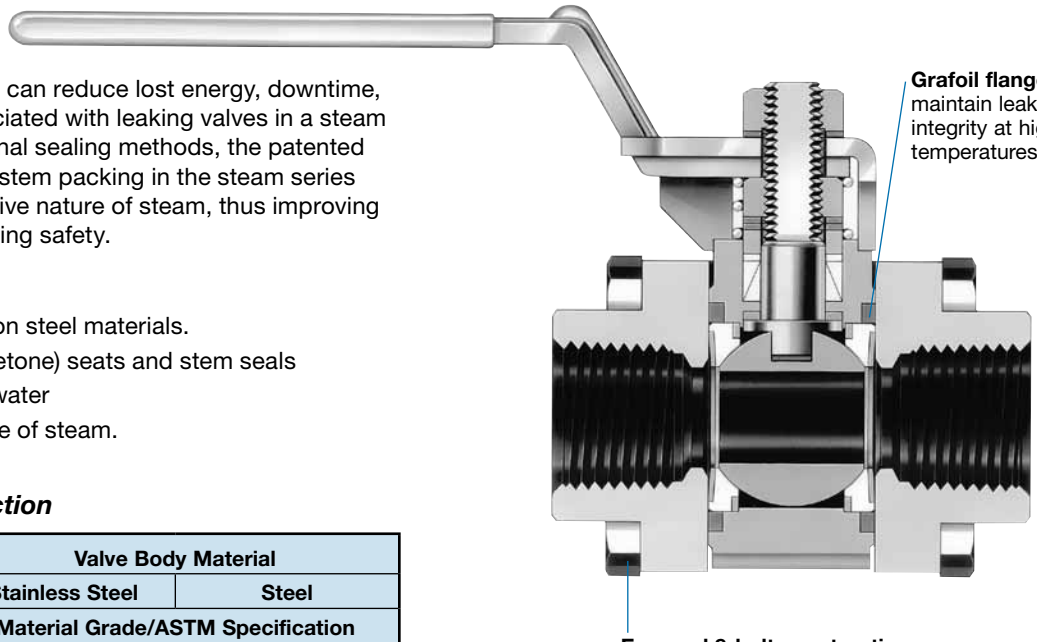

Features

- Stainless steel or carbon steel materials.
- PEEK (polyetheretherketone) seats and stem seals
  - resist absorption of water
  - resist erosive damage of steam.

Materials of Construction

Component	Valve Body Material	
	Stainless Steel	Steel
	Material Grade/ASTM Specification	
Packings, stem bearing, seats (2)	*Molybdenum disulfide-coated PEEK*	
Back sheets (2)	*S62P, S65P, S67P, S68P series—Grafoil; S63P series—N/A*	
Flange seals (2)	*Grafoil with 316 SS*①	
Body fasteners (8)	Grade B8M class 2/ A193	Zinc phosphate-coated grade B7/A193
Lubricant	*PTFE-based*	

Wetted components listed in *italics*.

All other components same as shown on page 4.

① S62P and S65P series—impregnated with hydrocarbon-based lubricant; RTV silicone sealant. S63P series—contains no 316 SS.

Pressure-Temperature Ratings

Valve Series	62	63, 65	67, 68	62, 63, 65	67, 68
Material	Stainless Steel			Steel	
Temperature, °F (°C)	Working Pressure, psig (bar)				
–20 (–28) to 100 (37)	2500 (172)	2500 (172)	2000 (137)	2500 (172)	2000 (137)
150 (65)	2420 (166)	2320 (159)	1920 (132)	2250 (155)	1820 (125)
200 (93)	2350 (161)	2150 (148)	1830 (126)	2010 (138)	1650 (113)
250 (121)	2280 (157)	1980 (136)	1750 (120)	1770 (121)	1480 (101)
300 (148)	2200 (151)	1910 (131)	1670 (115)	1520 (104)	1310 (90.2)
350 (176)	2120 (146)	1840 (126)	1600 (110)	1280 (88.1)	1140 (78.5)
400 (204)	2050 (141)	1770 (121)	1530 (105)	1040 (71.6)	970 (66.8)
450 (232)	1980 (136)	1700 (117)	1460 (100)	800 (55.1)	800 (55.1)
500 (260)	1910 (131)	1660 (114)	1410 (97.1)	710 (48.9)	710 (48.9)
550 (287)	1100 (75.7)	1100 (75.7)	1100 (75.7)	620 (42.7)	620 (42.7)
600 (315)	200 (13.7)	200 (13.7)	200 (13.7)	200 (13.7)	200 (13.7)

Steel valves with Swagelok tube fitting end connections: 375°F (190°C) max.

Saturated Steam Ratings

Stainless Steel Valves

1050 psig at 550°F (72.3 bar at 287°C)

Carbon Steel Valves

680 psig at 500°F (46.8 bar at 260°C)

Ordering Information

To order, insert **S** before the series designator and replace **T** with **P.**

Example: SS-**S**62**P**S4

To order steel valve body material, replace **SS** with **S.**

Example: **S**-S62PS4

Seal Kits

Seal kits contain stem springs, gland, packing support, packings, stem bearing, seats, seat springs, back sheets, flange seals, lubricant, sealant, and instructions.

Kit components are the same materials and grades listed in **Materials of Construction.**

Select a kit ordering number.

Valve Series	Kit Ordering Number
S62P	SS-91K-S62P
S63P	SS-91K-S63P
S65P	SS-91K-S65P
S67P	SS-91K-S67P
S68P	SS-91K-S68P

Special-Application Valves

Thermal Service (T60M Series)

The Swagelok thermal service ball valve, with its unique, spring-like metal seat, is designed to maintain a seal with a minimum seat load against the ball.

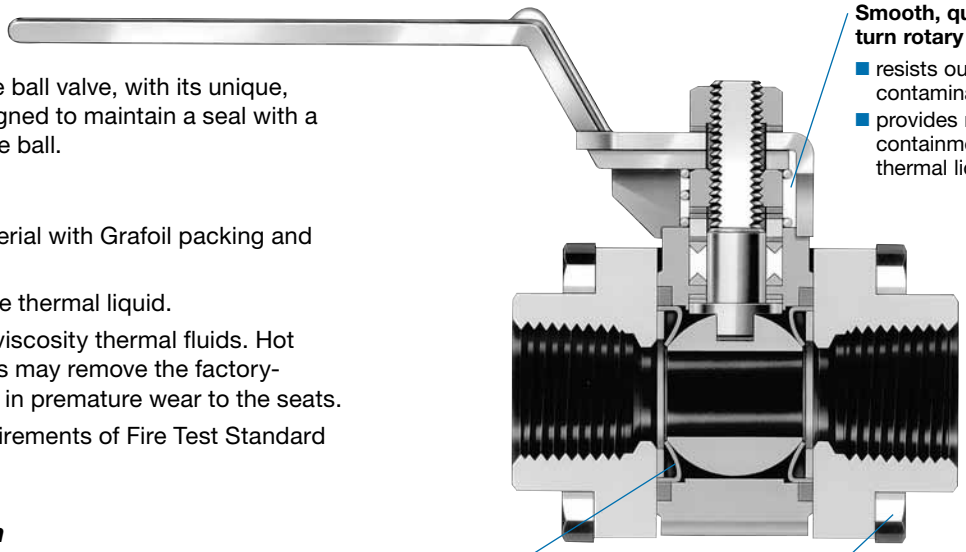

Smooth, quarter-turn rotary operation
- resists outside contaminants
- provides reliable containment of thermal liquids

Unique, spring-loaded metal seats
- provide positive leak-tight sealing at temperatures up to 850°F (454°C)
- work equally well in low- and high-pressure systems.

Encased 8-bolt construction

resists differential thermal expansion of body components during rapid temperature cycling

Features

- 316 SS or carbon steel material with Grafoil packing and alloy X-750 seats
- Resists contamination of the thermal liquid.
- Intended for use with high-viscosity thermal fluids. Hot gases or low-viscosity fluids may remove the factory-applied lubricant and result in premature wear to the seats.
- Exceeds performance requirements of Fire Test Standard API 607, 6th edition.

Materials of Construction

Component	Valve Body Material	
	Stainless Steel	Steel
	Material Grade/ASTM Specification	
Packing bearing	*Alloy X-750①/AMS 5542*	
Packing supports (2), back seats (2)	*316 SS/A276*	
Packing,② flange seals (2)③	*Grafoil with 316 SS*	
Ball	*S17400 SS①/A564*	
Seats	*Alloy X-750①/AMS 5542*	
Body fasteners (8)	Grade B8M class 2/ A193	Zinc phosphate-coated grade B7/A193
Lubricant	*Fluorinated tungsten disulfide*	

Wetted components listed in *italics.*

All other components same as shown on page 4.

① Coated with molybdenum disulfide with hydrocarbon binder.

② Impregnated with fluorocarbon-based lubricant.

③ Impregnated with anaerobic adhesive. T63M and T65M series—RTV silicone sealant.

Pressure-Temperature Ratings

Series	63, 65	67, 68	63, 65	67, 68
Material	Stainless Steel		Steel	
Temperature, °F (°C)	Working Pressure, psig (bar)			
–65 (–53) to 400 (204)	1000 (68.9)	500 (34.4)	1000 (68.9)	500 (34.4)
450 (232)	1000 (68.9)	500 (34.4)	800 (55.1)	500 (34.4)
500 (260)	1000 (68.9)	500 (34.4)	710 (48.9)	500 (34.4)
550 (287)	1000 (68.9)	500 (34.4)	620 (42.7)	500 (34.4)
600 (315)	1000 (68.9)	500 (34.4)	540 (37.2)	500 (34.4)
650 (343)	1000 (68.9)	500 (34.4)	450 (31.0)	450 (31.0)
700 (371)	1000 (68.9)	500 (34.4)	370 (25.4)	370 (25.4)
750 (398)	1000 (68.9)	500 (34.4)	280 (19.2)	280 (19.2)
800 (426)	1000 (68.9)	500 (34.4)	200 (13.7)	200 (13.7)
850 (454)	1000 (68.9)	500 (34.4)	—	—

Steel valve ratings limited to –20°F (–28°C).

Steel valves with Swagelok tube fitting end connections: 375°F (190°C) max.

Testing

All thermal service ball valves are tested with pure nitrogen at 50 psig (3.4 bar) for leak-tight integrity of the ball seats as specified by FCI 70-2 Class VI. Stem packing and body seals are tested for no visible leakage using a liquid leak detector.

Valve Series	Maximum Allowable Seat Leak Rate std cm^3/min
T63M, T65M	0.15
T67M	0.30
T68M	0.45

Ordering Information

Thermal service ball valves are available in 63, 65, 67, and 68 series sizes. To order, insert **T** before the series designator and replace the second **T** with **M.**

Example: SS-**T**63**M**S8

To order steel valve body material, replace **SS** with **S.**

Example: **S**-T63MS8

Seal Kits

Seal kits contain ball, seats, packing, flange seals, stem bearings, back seats, packing supports, stem springs, lubricant, sealant, and instructions.

Valve Series	Kit Ordering Number
T63M	SS-91K-T63M
T65M	SS-91K-T65M
T67M	SS-91K-T67M
T68M	SS-91K-T68M

Kit components are the same materials and grades listed in **Materials of Construction.**

Select a kit ordering number.

Special-Application Valves

Fire Series (A60T Series)

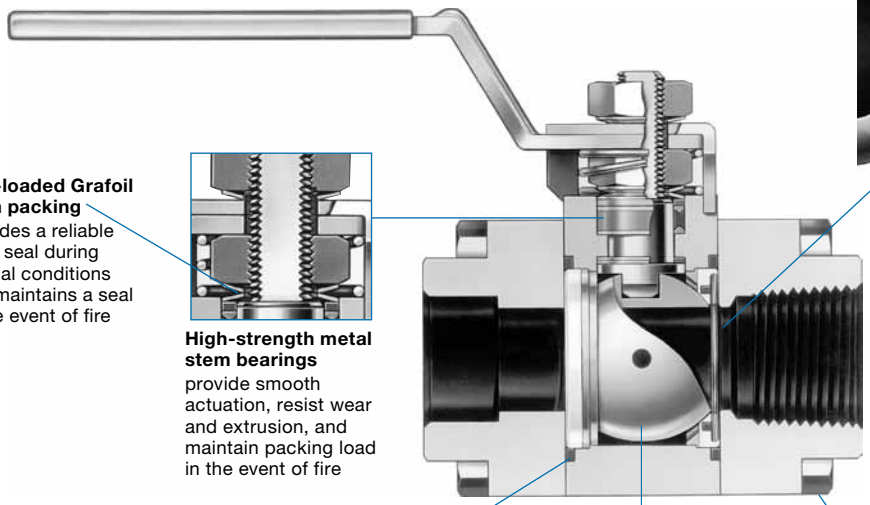

Compensating seat design
live loads the seat to compensate for wear and changes in temperature or pressure during normal conditions and reduces distortion of seats from pressure surges

Live-loaded Grafoil stem packing
provides a reliable stem seal during normal conditions and maintains a seal in the event of fire

High-strength metal stem bearings
provide smooth actuation, resist wear and extrusion, and maintain packing load in the event of fire

Grafoil weir ring
provides seat seal against the ball during fire conditions, even if only a portion of the seat is destroyed

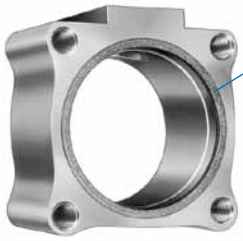

Grafoil flange seals
provide leak-tight containment under normal and fire conditions, eliminating the need for a secondary flange seal

Vented ball
allows pressure to equalize between valve body and upstream port, preventing overpressurization and potential seal blowout under fire conditions

Encased 8-bolt construction
maintains body integrity and body seals during rapid temperature changes resulting from fire exposure and water quenching

Materials of Construction

Component	Valve Body Material	
	Stainless Steel	Steel
	Material Grade/ASTM Specification	
Packing supports (2)	*Polyimide*	
Packing, flange seals (2)①	*Grafoil with 316 SS wire*	
Seats with integral weir rings (2)	*Glass-filled reinforced PTFE; Grafoil with 316 SS wire*	
Coned-disc springs (2)	*Grafoil-lined 316 SS/A167*	
Body fasteners (8)	Grade B8M class 2/ A193	Zinc phosphate-coated grade B7/A193
Lubricants	*Fluorinated tungsten disulfide; molybdenum disulfide with hydrocarbon binder; nickel antiseize in hydrocarbon carrier*	

Wetted components listed in *italics.*

All other components same as shown on page 4.

① RTV silicone sealant on flange seals.

Testing

In addition to the requirements given in **Testing,** page 5, fire series ball valves meet those of API Standard 607, 6th edition, and Swagelok fire test specification SEI-00334. See the Swagelok *Fire Series Ball Valves—A60T Series* catalog, MS-02-47, for more details.

Pressure-Temperature Ratings

Series	63, 65	67, 68
Material Name	Stainless Steel, Steel	
Temperature °F (°C)	Working Pressure, psig (bar)	
–40 (–40) to 100 (37)	2200 (151)	2000 (137)
150 (65)	1600 (110)	1600 (110)
200 (93)	1000 (68.9)	1000 (68.9)
250 (121)	400 (27.5)	400 (27.5)
300 (148)	300 (20.6)	300 (20.6)
350 (176)	200 (13.7)	200 (13.7)
400 (204)	100 (6.8)	100 (6.8)

Steel valve ratings limited to –20°F (–28°C).

Steel valves with Swagelok tube fitting end connections: 375°F (190°C) max.

Ordering Information

Fire series ball valves are available in 63, 65, 67, and 68 series sizes. To order, insert **A** into the ordering number.

Example: SS-**A**63**T**S8

To order steel valve body material, replace **SS** with **S.**

Example: **S**-A63TS8

Seal Kits

Seal kits contain stem springs, gland, packing, packing supports, stem bearings, seats with integral weir rings, seat springs, flange seals, and instructions.

Select a kit ordering number.

Valve Series	Kit Ordering Number
A63T	SS-91K-A63T
A65T	SS-91K-A65T
A67T	SS-91K-A67T
A68T	SS-91K-A68T

Special-Application Valves

Chlorine Series (C60V Series)

Features

- Materials include carbon steel valve body with virgin PTFE seats and packing, in accordance with the guidelines of the Chlorine Institute Pamphlet 6, *Piping Systems for Dry Chlorine.*
- Upstream ball vent prevents overpressurization in ball and body when valve is closed.

Materials of Construction

Component	Material Grade/ASTM Specification
Lower stem nut	Alloy 400
Packing support	ECTFE
Stem bearing	*ECTFE*
Packing	*Virgin PTFE/ASTM D1710*
Vented ball	*Alloy 400/B164*
Support rings (2)	*62, 63 series—alloy 400/B127* *65, 67, 68 series—316 SS/A167*
Seats (2)	*Virgin PTFE*
Coned-disc springs (2)	*Alloy X-750/AMS 5542*
Flanges (2)	*WCB/A216*
Body fasteners (4)	Cadmium-plated carbon steel grade 8/ SAE J429
Lubricant	*Fluorinated-based with PTFE*

Wetted components listed in *italics.*

All other components same as shown on page 4.

Pressure-Temperature Ratings

300 psig at –20 to 250°F (20.6 bar at –28 to 121°C).

Cleaning and Packaging

C60V series valve bodies and flanges are cleaned in mineral spirits followed by an aqueous cleaning solution containing a surfactant. All other wetted components are cleaned in accordance with Swagelok *Special Cleaning and Packaging (SC-11),* MS-06-63.

C60V series ball valves are capped and sealed individually in desiccant packaging and are tagged for chlorine service.

Testing

Every chlorine series valve is factory seat and shell tested with nitrogen at 300 psig (20.6 bar). Seats have a maximum allowable leak rate of 0.04 std cm^3/min.

Ordering Information

Select an ordering number from the **Dimensions** tables for Swagelok tube fitting, female NPT, or tube and pipe socket weld end connections. Insert **C** before the series designator. Replace **SS** and **T** with **S** and **V,** respectively.

Example: **S**-**C**62**V**S4

Seal Kits

Seal kits contain stem springs, gland, packing support, packings, stem bearing, seat subassemblies, flange seals, lubricant, and instructions.

Select a kit ordering number.

Valve Series	Kit Ordering Number
C62V	S-91K-C62V
C63V	S-91K-C63V
C65V	S-91K-C65V
C67V	S-91K-C67V
C68V	S-91K-C68V

Special-Application Valves

All-Welded Valves (W60T Series)

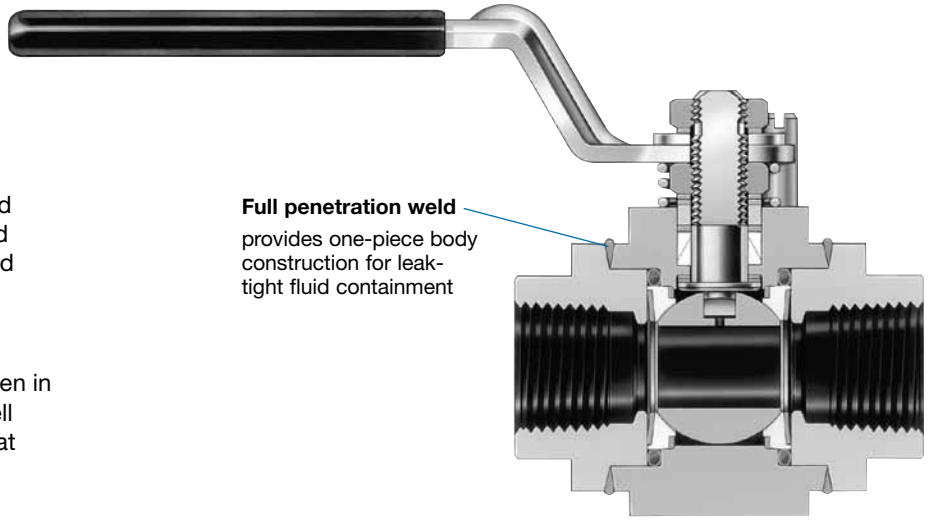

Features

All-welded ball valves incorporate the proven design features of the on-off (2-way) ball valve, all-welded body construction, and live-loaded packing to ensure total system fluid containment.

Testing

In addition to the requirements given in **Testing,** page 5, a hydrostatic shell test is performed with pure water at 1.5 times the working pressure.

Dimensions and Ordering Information

Dimensions, in inches and (millimeters), are for reference only and are subject to change.

Select an ordering number from the table below.

To order other seat materials, replace **T** with **C** for carbon/glass PTFE, **E** for UHMWPE, or **V** for virgin PTFE.

Example: SS-W63**C**F8

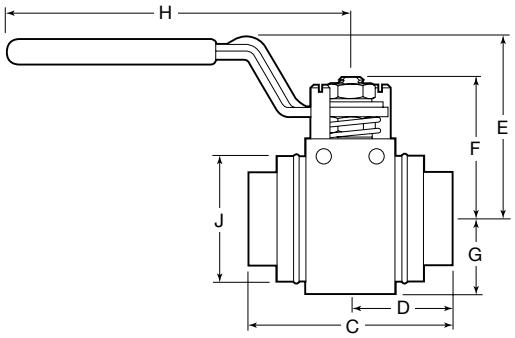

Size	Ordering Number	Orifice in. (mm)	C_v	Dimensions, in. (mm)						
				C	D	E	F	G	H	J
Female NPT End Connections										
1/2 in.	SS-W63TF8	0.516 (13.1)	12	2.69 (68.3)	1.34 (34.0)	2.32 (58.9)	1.79 (45.5)	0.96 (24.4)	4.50 (114)	1.60 (40.6)
1 in.	SS-W65TF16	0.875 (22.2)	38	3.59 (91.2)	1.79 (45.5)	2.93 (74.4)	2.52 (64.0)	1.26 (32.0)	6.00 (152)	2.24 (56.9)

Special-Application Valve

Valves for Low-Temperature Service (L60 Series)

Features

- Temperature rating –65 to 250°F (–53 to 121°C).
- Available in on-off (2-way) and switching (3-way) 62, 63, and 65 series sizes in stainless steel and in on-off (2-way) 62, 63, and 65 series sizes in brass.
- Available with seat materials shown in the **Pressure-Temperature Ratings** table below.

Materials of Construction

Component	Valve Body Material	
	Stainless Steel	Brass
	Material Grade/ASTM Specification	
Stem nut	316 SS	
Stem bearing	*Molybdenum disulfide-coated PEEK*	
Flange seals	*Buna C*	
Body fasteners (4)	316 SS gr B8M cl 2/A193	
Body hex nuts (8 or 4)	316 SS gr 8M str hd/A194	

Wetted components listed in *italics.*

All other components same as shown on page 4.

Pressure-Temperature Ratings

Temperature °F (°C)	Seat Material	Valve Body Material					
		Stainless Steel				Brass	
		Reinforced PTFE	Carbon/ Glass PTFE	Polyethylene	Virgin PTFE	Reinforced PTFE, Carbon/ Glass PTFE, Polyethylene	Virgin PTFE
	Valve Series	Working Pressure, psig (bar)					
On-Off (2-Way)							
–65 (–53) to 100 (37)	62	2200 (151)	2500 (172)	3000 (206)	1500 (103)	2000 (137)	1500 (103)
	63	2200 (151)	2500 (172)	2500 (172)	1500 (103)	1500 (103)	1500 (103)
	65	2200 (151)	2500 (172)	2500 (172)	1500 (103)	1500 (103)	1500 (103)
Switching (3-Way)							
–65 (–53) to 100 (37)	62, 63, 65	1000 (68.9)	1000 (68.9)	1000 (68.9)	1000 (68.9)	—	—

See **Pressure-Temperature Ratings,** page 6, for ratings from 100 to 250°F (37 to 121°C).

Ordering Information

To order, insert **L** in the ordering number.

Examples: SS-**L**62TS4
SS-**L**62XTS4

Seal Kits

Seal kit components are the same materials and grades listed in **Materials of Construction.**

See **Seal Kits,** page 23, for ordering information.

Special-Application Valves

Valves for Rapid-Cycle Service (R60T Series)

The ball valve with an O-ring stem seal may be more effective in applications requiring rapid cycling of a valve or when packing adjustments may be difficult.

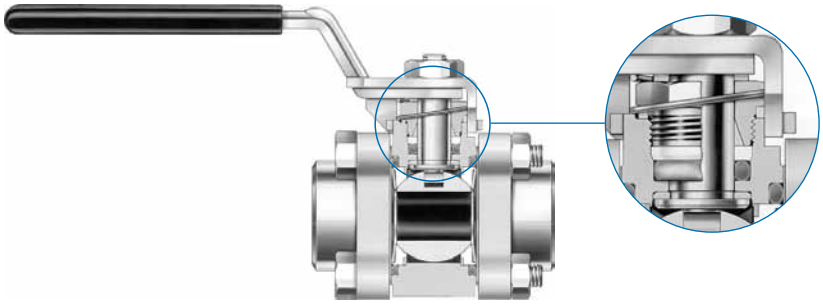

Materials of Construction

Component	Material Grade/ ASTM Specification
Packing bolt①, spacer ring	316 SS/A276
Top O-ring support	PEEK
Stem bearing	*PEEK*
Bottom O-ring support	Reinforced PTFE
Flange seal, stem O-ring	*Fluorocarbon FKM*

Wetted components listed in *italics*.
All other components same as shown on page 4.
① Coated with molybdenum disulfide with hydrocarbon binder.

Pressure-Temperature Ratings

Valve Series	Pressure Rating at 0 to 100°F (–17 to 37°C)	Pressure Rating at 400°F (204°C)
R62T, R63T, R65T	2200 psig (151 bar)	330 psig (22.7 bar)
R67T, R68T	1500 psig (103 bar)	

Ordering Information

To order, insert **R** before the series designator in the valve ordering number.

Example: SS-**R**63TS8

Seal Kits

Seal kits contain stem spring, stem O-ring supports, spacer ring, stem O-ring, stem bearing, seats, seat springs, flange seals, lubricant, and instructions.

Kit components are the same materials and grades listed in **Materials of Construction.**

Select a kit ordering number.

Valve Series	Kit Ordering Number
R62T	SS-91K-R62T
R63T	SS-91K-R63T
R65T	SS-91K-R65T
R67T	SS-91K-R67T
R68T	SS-91K-R68T

Options and Accessories

Handles

Locking Lever Bracket Handle

Oval Handle

A variety of handle options is available for use with 60 series ball valves. To order a locking lever bracket handle, add **-JL** to the ordering number. To order an oval handle, add **-JK** to the ordering number. For additional information and dimensions, see the Swagelok *Process Ball Valves Handle Options* catalog, MS-01-137.

Vented Valves

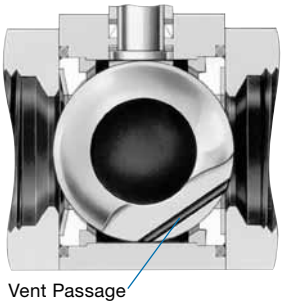

External Vent Option

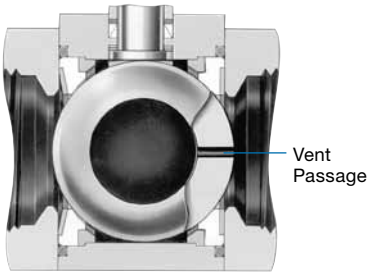

Internal Vent Option

On-off (2-way) ball valves are available with either an internal or an external vent. These vents are available for either upstream or downstream service. For details and ordering information, see the Swagelok *Process Ball Valve Vent Options* catalog, MS-02-28.

Low Dead Space Inserts

- Reduce fluid entrapment around the ball, stem, and seats while the valve is in the open or closed position.
- For use in select ball valves; not for use on steam, thermal, or fire series valves.
- Made from carbon/glass reinforced PTFE.

To order, add **-LD** to the valve ordering number.

Examples: SS-62TS4**-LD;** SS-62XTS4-F8**-LD**

Kits for Field Assembly

Select an ordering number.

Valve Series	Kit Ordering Numbers	
	Low Temperature	All Other
On-Off (2-Way) Valves		
62	TGC-91K-L62-LD	TGC-91K-62-LD
63	TGC-91K-L63-LD	TGC-91K-63-LD
65	TGC-91K-L65-LD	TGC-91K-65-LD
67	TGC-91K-L67-LD	TGC-91K-67-LD
68	TGC-91K-L68-LD	TGC-91K-68-LD
Switching (3-Way) Valves		
62	TGC-91K-L62X-LD	TGC-91K-62X-LD
63	TGC-91K-L63X-LD	TGC-91K-63X-LD
65	TGC-91K-L65X-LD	TGC-91K-65X-LD
67	TGC-91K-L67X-LD	TGC-91K-67X-LD
68	TGC-91K-L68X-LD	TGC-91K-68X-LD

Panel Mount Kits

- Allow vertical or horizontal mounting.
- Can be installed on panels up to 3/16 in. (4.8 mm) for 62 series and 1/4 in. (6.4 mm) thick for 63, 65, 67, and 68 series.
- Fit oval and lever handle.
- Provide template for drilling holes.

Ordering Information

Select an ordering number.

For 4-Bolt Valves Assembled with Carbon Steel or Stainless Steel Bolts

Kits include self-cinching nut, cover plate, cap screws, panel mount brackets, two stainless and two carbon steel bolts, and instructions.

Valve Series	Kit Ordering Number
62	MS-PMK-62
63	MS-PMK-63
65	MS-PMK-65
67	MS-PMK-67
68	MS-PMK-68

For 4-Bolt Valves Assembled with Stainless Steel Studs and All 8-Bolt Valves

Kits include self-cinching nut, cover plate, cap screws, panel mount brackets, and instructions.

Valve Series	Kit Ordering Number
62	MS-PMK-S62
63	MS-PMK-S63
65	MS-PMK-S65
67	MS-PMK-S67
68	MS-PMK-S68

Options and Accessories

Seal Kits

The swing-out design of 4-bolt valves allows fast and easy maintenance with the valve inline.

Kits contain:

- gland
- packing support
- packings
- stem bearings
- stem springs (not included in 62 series seal kits)
- seat subassemblies
- flange seals
- ball (alloy X-750 seal kit only)
- lubricant appropriate to seat material, shown on page 4
- instructions.

To order a seal kit for a stainless steel or steel valve, add a seat material designator to the basic ordering number.

Example: SS-91K-62**T**

To order a seal kit for a brass valve, replace **SS** with **B.**

Example: **B**-91K-62T

To order a seal kit for a low-temperature service valves, insert **L** before the series designator.

Example: SS-91K-**L**62T

Valve Series	Basic Ordering Number	Seat Material Designator
62	SS-91K-62	**T** Reinforced PTFE **M** Alloy X-750 **C** Carbon/glass reinforced PTFE **P** PEEK **E** UHMWPE **V** Virgin PTFE
63	SS-91K-63	
65	SS-91K-65	
67	SS-91K-67	
68	SS-91K-68	

Flange Seal Kits

Each 4-bolt valve kit contains two flange seals, lubricant, and instructions. To order, add a flange seal material designator and a uniform size number to basic ordering number **-91K-**.

Example: **VA70**-91K-**121**

Flange Seal Material	Designator	Temperature Range °F (°C)	Uniform Size Number
Alloy X-750, PTFE coated①	INCX	–65 to 450 (–53 to 232)	
Buna N	BN70	–20 to 250 (–28 to 121)	**017** 62 series
Buna C①	BC70	–65 to 250 (–53 to 121)	**121** 63 series
Ethylene propylene	EP70	–20 to 250 (–28 to 121)	**129** 65 series
Fluorocarbon FKM	VA70	–20 to 450 (–28 to 232)	**141** 67 series **147** 68 series
Neoprene	NE70	–20 to 250 (–28 to 121)	
PTFE	T	50 to 150 (10 to 65)	

① 62, 63, and 65 series valves only.

Fastener Kits

Each 4-bolt valve kit contains stem nuts, body fasteners, and body nuts. Select an ordering number.

Valve Series	Valve Body Material	
	Stainless Steel	Brass, Steel
	Fastener Kit Ordering Number	
62	316-61K-62	S-61K-62
63	316-61K-63	S-61K-63
65	316-61K-65	S-61K-65
67	316-61K-67	S-61K-67
68	316-61K-68	S-61K-68

Pneumatic Actuators

Swagelok rack and pinion pneumatic actuators are compact, lightweight, easily mountable, and can be operated with standard shop air. They are available in spring-return and double-acting modes. On-off (2-way) valves require 90° actuation; switching (3-way) valves require 180° actuation.

Valve-actuator assemblies on this page are:

- for standard 4-bolt cast stainless steel valve bodies with seat materials shown
- based on a –20 to 100°F (–28 to 37°C) system temperature and the valve cycling at least once per day but not more than once per hour.

For other valve body materials or if your application falls outside of this scope, contact your authorized Swagelok representative.

Low-pressure spring-return actuators for applications with lower-pressure actuator air supply are available. Contact your authorized Swagelok representative.

For technical data, including materials of construction, air displacement, and weight, see the *Swagelok Ball Valve Actuation Options* catalog, MS-02-343.

⚠ **Caution: Actuated assemblies must be properly aligned and supported. Inadequate alignment or improper support of the actuated assembly may result in leakage or premature valve failure.**

Pressure-Temperature Ratings

Actuator Service	Actuator Service Designator	Temperature Range °F (°C)	Maximum Actuator Pressure psig (bar)	
			At 100°F (37°C)	At Maximum Temperature
Standard	—	–20 to 200 (–28 to 93)	200 (13.7)	165 (11.3)
High temperature	HT	0 to 400 (–17 to 204)		100 (6.8)
Low temperature	LT	–40 to 200 (–40 to 93)		165 (11.3)
Nonfluorocarbon	NF	–20 to 200 (–28 to 93)		165 (11.3)

Actuator Pressure at System Pressure—On-Off (2-Way) Valves

Based on valve performance using pressurized air or nitrogen.

Valve Series	Seat Material Designator	System Pressure psig (bar)	Actuator Model	Actuator Model Designator	Actuation Mode			
					Spring Return		Double Acting	
					Single	Dual	Single	Dual
					Minimum Actuator Pressure psig (bar)			
62	C, E, T, V	Maximum valve rating	31 (90°)	-31	75 (5.2)	—	45 (3.2)	80 (5.6)
			33 (90°)	-33	70 (4.9)	80 (5.6)	15 (1.1)	20 (1.4)
	P	1050 (72.3)	31 (90°)	-31	75 (5.2)	—	50 (3.5)	85 (5.9)
		1500 (103)	31 (90°)	-31	—	—	55 (3.8)	100 (6.9)
		2500 (172)	31 (90°)	-31			70 (4.9)	—
		1050 (72.3)	33 (90°)	-33	70 (4.9)	80 (5.6)	20 (1.4)	35 (2.5)
		2500 (172)	33 (90°)	-33	80 (5.6)	90 (6.3)	25 (1.8)	45 (3.2)
63	C, E, T, V	Maximum valve rating	31 (90°)	-31	—	—	100 (6.9)	—
			33 (90°)	-33	80 (5.6)		40 (2.8)	70 (4.9)
	M		33 (90°)	-33	—		90 (6.3)	—
	P	1050 (72.3)	31 (90°)	-31	—		100 (6.9)	—
			33 (90°)	-33	80 (5.6)		35 (2.5)	60 (4.2)
		1500 (103)	33 (90°)	-33	85 (5.9)		45 (3.2)	75 (5.2)
		2000 (137)	33 (90°)	-33	95 (6.6)		55 (3.8)	100 (6.9)
		2500 (172)	33 (90°)	-33	—		70 (4.9)	—
	T (fire)	Maximum valve rating	33 (90°)	-33	70 (4.9)		—	—
65	C, E, T, V	Maximum valve rating	33 (90°)	-33	—	—	100 (6.9)	—
			35 (90°)	-35	75 (5.2)	80 (5.6)	40 (2.8)	70 (4.9)
	M		35 (90°)	-35	—	—	60 (4.2)	—
	P	1050 (72.3)	33 (90°)	-33	95 (6.6)		50 (3.5)	90 (6.3)
		1500 (103)	33 (90°)	-33	—		85 (5.9)	—
		1050 (72.3)	35 (90°)	-35	65 (4.5)	80 (5.6)	25 (1.8)	40 (2.8)
		1500 (103)	35 (90°)	-35	75 (5.2)	—	35 (2.5)	60 (4.2)
		2500 (172)	35 (90°)	-35	80 (5.6)		50 (3.5)	90 (6.3)
	T (fire)	Maximum valve rating	35 (90°)	-35	70 (4.9)		—	—
67	C, E, T, V	Maximum valve rating	35 (90°)	-35	90 (6.3)	—	50 (3.5)	90 (6.3)
	M		35 (90°)	-35	—		80 (5.6)	—
	P	1050 (72.3)	35 (90°)	-35	80 (5.6)		45 (3.2)	70 (4.9)
		1500 (103)	35 (90°)	-35	90 (6.3)		60 (4.2)	100 (6.9)
		2000 (137)	35 (90°)	-35	—		75 (5.2)	—
	T (fire)	Maximum valve rating	35 (90°)	-35	80 (5.6)		—	—
68	C, E, T, V	Maximum valve rating	35 (90°)	-35	—	—	85 (5.9)	—
	M		35 (90°)	-35	—		100 (6.9)	—
	P	1050 (72.3)	35 (90°)	-35	90 (6.3)		60 (4.2)	100 (6.9)
		1500 (103)	35 (90°)	-35	—		75 (5.2)	—
		2000 (137)	35 (90°)	-35			90 (6.3)	—

Pneumatic Actuators

Actuator Pressure at System Pressure—Switching (3-Way) Valves

Based on valve performance using pressurized air or nitrogen.

Valve Series	Seat Material Designator	System Pressure psig (bar)	Actuator Model	Actuator Model Designator	Actuation Mode: Spring Return Single	Spring Return Dual	Double Acting Single	Double Acting Dual
					Minimum Actuator Pressure psig (bar)			
62	C, E, T, V	Maximum valve rating	51 (180°)	-51	75 (5.2)	—	45 (3.2)	70 (4.9)
			53 (180°)	-53	75 (5.2)	80 (5.6)	15 (1.1)	25 (1.8)
	P		51 (180°)	-51	—	—	50 (3.5)	85 (5.9)
			53 (180°)	-53	65 (4.5)	75 (5.2)	20 (1.4)	35 (2.5)
63	C, E, T, V	Maximum valve rating	51 (180°)	-51	—	—	95 (6.6)	—
			53 (180°)	-53	80 (5.6)		40 (2.8)	70 (4.9)
	P		51 (180°)	-51	—		85 (5.9)	—
			53 (180°)	-53	80 (5.6)		30 (2.1)	60 (4.2)
65	C, E, T, V	Maximum valve rating	53 (180°)	-53	—	—	85 (5.9)	—
			55 (180°)	-55	80 (5.6)		30 (2.1)	50 (3.5)
	P		53 (180°)	-53	—		50 (3.5)	90 (6.3)
			55 (180°)	-55	75 (5.2)	85 (5.9)	20 (1.4)	30 (2.1)
67	C, E, T, V	Maximum valve rating	55 (180°)	-55	85 (5.9)	—	50 (3.5)	80 (5.6)
	P		55 (180°)	-55	60 (4.2)		35 (2.5)	65 (4.5)
68	C, E, T, V	Maximum valve rating	55 (180°)	-55	90 (6.3)	—	60 (4.2)	100 (6.9)
	P		55 (180°)	-55	—		55 (3.8)	100 (6.9)

Ordering Information

Factory-Assembled Valves with Actuators

Typical Ordering Number

A B C D

SS-63TS8 - 33 D HT

A Valve Ordering Number

B Actuator Model

Based on valve series and seat material, select actuator designator. See **Actuator Pressure at System Pressure** tables, page 24 for on-off (2-way) valves and on this page for switching (3-way) valves.

31 = 90° actuation
33 = 90° actuation
35 = 90° actuation
51 = 180° actuation
53 = 180° actuation
55 = 180° actuation

C Actuation Mode

C = Spring return, normally closed
D = Double acting
O = Spring return, normally open
S = Spring return, switching (3-way) valves

D Actuator Service

FP = Fusible plug①
HT = High temperature②
LT = Low temperature
NF = Nonfluorocarbon③
None = Standard

① Available for fire series valves: a fail-safe pneumatic actuator that contains a Swagelok fusible plug and a Swagelok mud-dauber fitting. The fusible plug melts if the external temperature reaches 280°F (137°C), relieving pressure in the actuator and allowing the valve to cycle closed.

② Suggested for steam service and thermal service valves.

③ Suggested for factory-assembled valves with UHMWPE seats and packing.

*For dual-mounted assemblies (two valves mounted to one actuator), add **DM** to the ordering number.*

*Example: SS-63TS8-33D**DM***

*See next page for **Kits for Field Assembly.***

Pneumatic Actuators

Ordering Information

Kits for Field Assembly

Order one actuator kit and one mounting bracket kit for each valve.

Actuator Kit Typical Ordering Number

	A		B		C
MS - 1	**31**	**-**	**DA**		**-HT**

A Actuator Model

Based on valve series and seat material, select actuator designator. See **Actuator Pressure at System Pressure** tables, page 24 for on-off (2-way) valves and page 25 for switching (3-way) valves.

31 = 90° actuation
33 = 90° actuation
35 = 90° actuation
51 = 180° actuation
53 = 180° actuation
55 = 180° actuation

B Actuation Mode

DA = Double acting
SR = Spring return

C Actuator Service

-FP = Fusible plug①
-HT = High temperature②
-LT = Low temperature
-NF = Nonfluorocarbon
None = Standard

① Available for fire series valves: a fail-safe pneumatic actuator that contains a Swagelok fusible plug and a Swagelok mud-dauber fitting. The fusible plug melts if the external temperature reaches 280°F (137°C), relieving pressure in the actuator and allowing the valve to cycle closed.

② Suggested for steam service and thermal service valves.

Mounting Bracket Kits

Mounting bracket kits for standard 4-bolt cast stainless steel valves contain:

- 304 stainless steel mounting bracket
- 420 stainless steel actuator roll pin (31, 33, 51, and 53 actuators) or cadmium-plated carbon steel shoulder screw and lock nut (35 and 55 actuators)
- cadmium-plated carbon steel coupling
- 316 stainless steel lock tab
- two cadmium-plated carbon steel socket head cap screws
- two 316 SS gr 8M body hex nuts
- two 316 SS gr B8M cl 2 body fasteners
- two cadmium-plated carbon steel gr 8 body fasteners
- instructions.

Mounting bracket kits for all-welded (W60T series) valves contain:

- 304 stainless steel top plate
- two 304 stainless steel side plates
- cadmium-plated carbon steel shoulder screw and lock nut (35 and 55 actuator models)
- 304 stainless steel coupling (W63T series) or cadmium plated carbon steel coupling (W65T series)
- two 316 stainless steel (33 actuator with W65T series) or two 18-8 stainless steel (all other combinations) hex bolts
- two 316 stainless steel (33 actuator with W65T series) or two 18-8 stainless steel (all other combinations) hex nuts
- two 316 stainless steel (33 actuator with W65T series) or two 18-8 stainless steel (all other combinations) lock washers
- two 18-8 stainless steel socket head cap screws
- 304 stainless steel wall mount (33 actuator with W63T series only)
- instructions.

Valve Series	Actuator Model	Flow Pattern or Valve Type	Mounting Bracket Kit Ordering Number
62	31 (90°), 51 (180°)	On-off, switching	MS-MB-62
		Steam	MS-MB-S62
	33 (90°), 53 (180°)	On-off, switching	MS-MB-62-133
		Steam	MS-MB-S62-133
63	31 (90°), 51 (180°)	On-off, switching, steam	MS-MB-63-131
		All welded	MS-MB-73-131
63	33 (90°), 53 (180°)	On-off, switching, fire, steam, thermal	MS-MB-63
		All welded	MS-MB-73-133
65	33 (90°), 53 (180°)	On-off, switching, steam, thermal	MS-MB-65
		All welded	MS-MB-75-133
65	35 (90°), 55 (180°)	On-off, switching, fire, steam, thermal	MS-MB-65-135
		All welded	MS-MB-75-135
67	35 (90°), 55 (180°)	All	MS-MB-67
68	35 (90°), 55 (180°)	All	MS-MB-68

Pneumatic Actuators

Dimensions

Dimensions, in inches (millimeters), are for reference only and are subject to change.

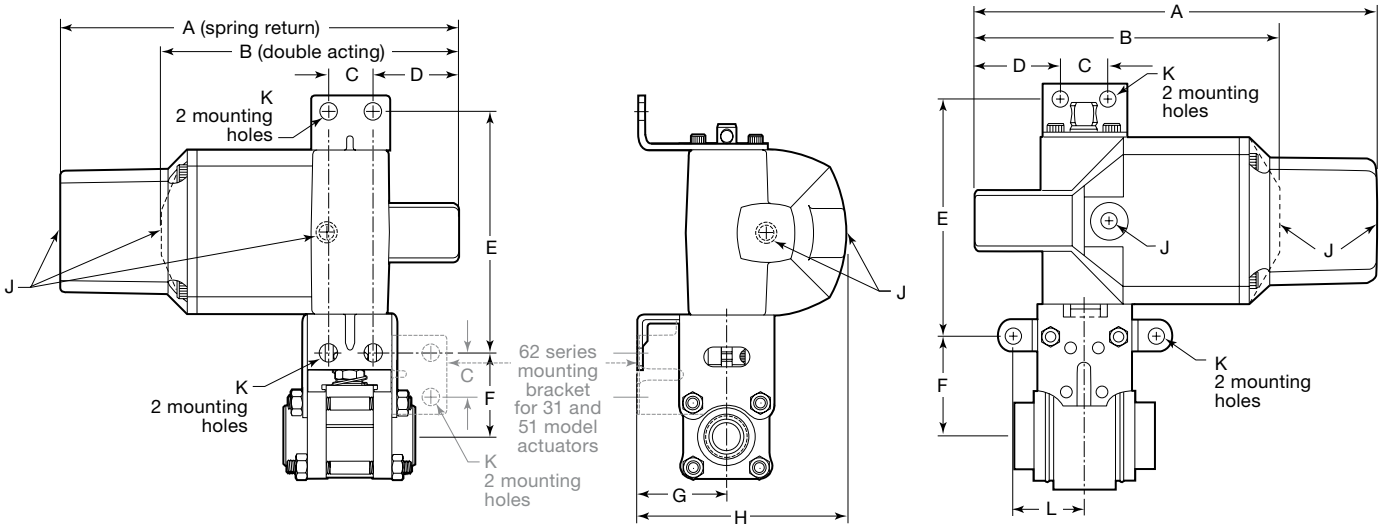

All Welded

Valve Series	Flow Pattern or Valve Type	Dimensions, in. (mm)										
		A	B	C	D	E	F	G	H	J	K	L
31 and 51 Models												
62	On-off, switching	4.91 (125)	4.09 (104)	0.63 (16.0)	1.15 (22.9)	3.50 (88.9)	1.33 (33.8)	1.31 (33.3)	3.04 (77.2)	1/8 in. NPT	0.34 (8.6)	—
63	On-off, switching	4.91 (125)	4.09 (104)	0.63 (16.0)	1.15 (22.9)	3.38 (85.9)	1.92 (488)	1.31 (33.3)	3.04 (77.2)	1/8 in. NPT	0.34 (8.6)	—
	All welded	4.91 (125)	4.09 (104)	0.63 (16.0)	1.15 (22.9)	3.52 (89.4)	1.86 (47.2)	1.31 (33.3)	3.04 (77.2)	1/8 in. NPT	0.34 (8.6)	1.41 (35.8)
33 and 53 Models												
62	On-off, switching	7.86 (200)	5.89 (150)	0.88 (22.4)	1.73 (44.0)	4.63 (118)	1.21 (30.7)	1.75 (44.4)	4.07 (103)	1/8 in. NPT	0.34 (8.6)	—
63	On-off, switching	7.86 (200)	5.89 (150)	0.88 (22.4)	1.73 (44.0)	4.63 (118)	1.64 (41.7)	1.75 (44.4)	4.07 (103)	1/8 in. NPT	0.34 (8.6)	—
	All welded	7.86 (200)	5.89 (150)	0.88 (22.4)	1.73 (44.0)	4.51 (115)	1.87 (47.5)	1.75 (44.4)	4.07 (103)	1/8 in. NPT	0.34 (8.6)	1.41 (35.8)
65	On-off, switching	7.86 (200)	5.89 (150)	0.88 (22.4)	1.73 (44.0)	4.63 (118)	2.54 (64.5)	1.75 (44.4)	4.07 (103)	1/8 in. NPT	0.34 (8.6)	—
	All welded	7.86 (200)	5.89 (150)	0.88 (22.4)	1.73 (44.0)	4.68 (119)	2.47 (62.7)	1.75 (44.4)	4.07 (103)	1/8 in. NPT	0.34 (8.6)	1.72 (43.7)
35 and 55 Models												
65	On-off, switching	11.9 (302)	8.41 (214)	2.88 (73.0)	1.71 (43.5)	4.75 (121)	4.41 (112)	2.00 (50.8)	5.15 (131)	1/2 in. NPT	0.53 (13.5)	—
	All welded	11.9 (302)	8.41 (214)	2.88 (73.0)	1.71 (43.5)	6.53 (166)	2.63 (66.8)	2.00 (50.8)	5.15 (131)	1/2 in. NPT	0.53 (13.5)	2.13 (54.1)
67	On-off, switching	11.9 (302)	8.41 (214)	2.88 (73.0)	1.71 (43.5)	4.75 (121)	4.93 (125)	2.00 (50.8)	5.15 (131)	1/2 in. NPT	0.53 (13.5)	—
68	On-off, switching	11.9 (302)	8.41 (214)	2.88 (73.0)	1.71 (43.5)	4.75 (121)	5.20 (132)	2.00 (50.8)	5.15 (131)	1/2 in. NPT	0.53 (13.5)	—

ISO 5211-Compliant Pneumatic Actuators

Swagelok 63 series valve with actuator, solenoid, and proximity sensor.

These Swagelok rack and pinion pneumatic actuators are ISO 5211 compliant and are suitable for general applications. They are available in spring-return and double-acting modes. On-off (2-way) valves require 90° actuation; switching (3-way) valves require 180° actuation (90° actuation for valves with L flow pattern).

Valve-actuator assemblies on this page are:

- for standard 4-bolt cast stainless steel valve bodies with reinforced PTFE seats and packings
- based on a –20 to 100°F (–28 to 37°C) system temperature and the valve cycling at least once per day but not more than once per hour.

For other valve body and seat materials or if your application falls outside of this scope, contact your Swagelok sales and service representative.

For technical data, including actuator materials of construction and weight, see the *Swagelok Ball Valve Actuation Options* catalog, MS-02-343.

For additional information on selecting and sizing ISO 5211-compliant actuators, see the *Actuated Ball Valve Selection Guide—ISO 5211-Compliant Actuator Mounting Bracket Kits,* MS-02-136.

⚠ **Caution: Actuated assemblies must be properly aligned and supported. Improper alignment or inadequate support of the actuated assembly may result in leakage or premature valve failure.**

Pressure-Temperature Ratings

Maximum actuator pressure is 116 psig (8.0 bar). See **Minimum Actuator Pressure** table below for minimum actuator pressures.

Actuator Service	Actuator Service Designator	Temperature Range °F (°C)
Standard	—	–40 to 176 (–40 to 80)
High temperature	HT	5 to 302 (–15 to 150)

Minimum Actuator Pressure

Valve Series	Actuator Model	Spring Return Model Designators: Normally Closed	Spring Return Model Designators: Normally Open	Actuator Model	Double Acting Model Designator	Actuation Mode: Spring Return	Actuation Mode: Double Acting
						Minimum Actuator Pressure, psig (bar)	
On-Off (2-Way) Valves							
62	A15	-A15C4	-A15O4	A10	-A10D	—	36 (2.5)
				A15	-A15D	50 (3.5)	36 (2.5)
63	A30	-A30C4	-A30O4	A30	-A30D	50 (3.5)	36 (2.5)
65	A60	-A60C5	-A60O5	A60	-A60D	72 (5.0)	36 (2.5)
67	A100	-A100C5	-A100O5	A100	-A100D	65 (4.5)	43 (3.0)
	A150	-A150C4	-A150O4			61 (4.2)	
68	A150	-A150C5	-A150O5	A100	-A100D	65 (4.5)	58 (4.0)
	A220	-A220C4	-A220O4			50 (3.5)	
Switching (3-Way) Valves							
62	A15	—	—	A15	-A15XD	—	36 (2.5)
63	A30			A30	-A30XD		36 (2.5)
65	A60			A60	-A60XD		36 (2.5)
67	A100			A100	-A100XD		43 (3.0)
68	A100			A100	-A100XD		58 (4.0)
Switching (3-Way) Valves with L Flow Pattern							
62	A15	-A15S4	—	A15	-A15D	50 (3.5)	36 (2.5)
63	A30	-A30S4		A30	-A30D	50 (3.5)	36 (2.5)
65	A60	-A60S5		A60	-A60D	72 (5.0)	36 (2.5)
67	A100	-A100S5		A100	-A100D	65 (4.5)	43 (3.0)
	A150	-A150S4				61 (4.2)	
68	A150	-A150S5		A100	-A100D	65 (4.5)	58 (4.0)
	A220	-A220S4				50 (3.5)	

ISO 5211-Compliant Pneumatic Actuators

Ordering Information

Factory-Assembled Valves with Actuators

Typical Ordering Number

A	B	C
SS-63TS8	**-A30D**	**HT**

A Valve Ordering Number

B Actuator Model
Based on valve series, actuation mode, and flow pattern, select actuator designator. See **Minimum Actuator Pressure** table, page 28.

C Actuator Service
HT = High temperature
None = Standard

Kits for Field Assembly

Order one actuator kit and one mounting bracket kit for each valve.

Actuator Kit Typical Ordering Number

A	B	C
MS - **A30-4**	- DIN	**-HT**

A Actuator Model
Based on valve series, actuation mode, and flow pattern, select actuator designator. See **Minimum Actuator Pressure** table, page 28, and **Actuator Model Designators** table below.

B Coupling Drive Type
DIN

C Actuator Service
-HT = High temperature
None = Standard

Actuator Model Designators

Valve Series	Spring Return Actuator Model	Spring Return Model Designator	Double Acting Model	Double Acting Model Designator
On-Off (2-Way) Valves and Switching (3-Way) Valves with L Flow Pattern				
62	A15	A15-4	A10	A10-DA
			A15	A15-DA
63	A30	A30-4	A30	A30-DA
65	A60	A60-5	A60	A60-DA
67	A100	A100-5	A100	A100-DA
	A150	A150-4		
68	A150	A150-4	A100	A100-DA
	A220	A220-4①		
Switching (3-Way) Valves				
62	A15	–	A15	A15-XDA
63	A30		A30	A30-XDA
65	A60		A60	A60-XDA
67, 68	A100		A100	A100-XDA

① Requires adapter insert **MS-ADH22/17,** available separately, to reduce actuator coupling receptacle to 0.67 in. (17 mm) square.

Mounting Bracket Kits

Swagelok ISO 5211 mounting bracket kits for 4-bolt cast stainless steel valves contain:

- 316 stainless steel mounting bracket
- four A4 stainless steel socket head cap screws (A4 is approximately equivalent to AISI 316.)
- 316 stainless steel coupling
- 316 stainless steel wall mounting bracket
- two 316 stainless steel lock washers
- 302 stainless steel upper and lower grounding springs
- 316 stainless steel lock tab
- two 316 stainless steel hex nuts and bolts
- lubricant and MSDS
- instructions.

Valve Series	Mounting Bracket Kit Ordering Number
62	SS-MB-62-F04-11DIN-M
63	SS-MB-63-F05-14DIN-M
65	SS-MB-65-F05-14DIN-M
67	SS-MB-67-F07-17DIN-M
68	SS-MB-68-F07-17DIN-M

For 60 series valves with other body materials and for 8-bolt 60 series valves, contact your authorized Swagelok representative.

ISO 5211-Compliant Pneumatic Actuators

Dimensions

Dimensions, in inches (millimeters), are for reference only and are subject to change.

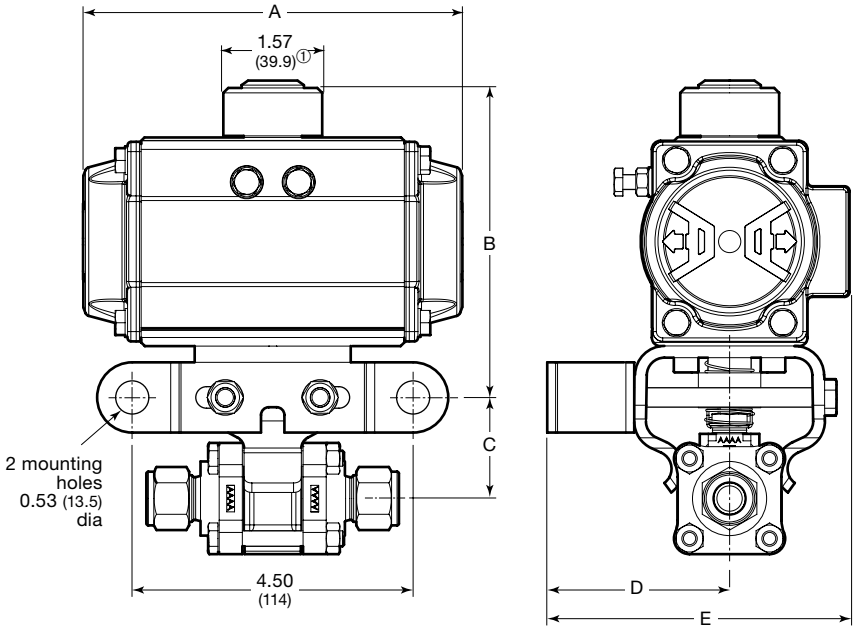

① A220 model: 2.56 (65.0).

Valve Series	Actuator Model	Dimensions, in. (mm)				
		A	B	C	D	E
On-Off (2-Way) Valves						
62	A10	4.65 (118)	4.21 (107)	1.54 (39.1)	2.90 (73.7)	4.61 (117)
	A15	5.33 (135)	4.33 (110)	1.54 (39.1)	2.90 (73.7)	4.61 (117)
63	A30	6.04 (153)	4.96 (126)	1.62 (41.1)	2.92 (74.2)	4.83 (123)
65	A60	8.01 (203)	6.42 (163)	2.18 (55.4)	3.30 (83.8)	5.41 (137)
	A100	9.46 (240)	6.93 (176)	2.18 (55.4)	3.30 (83.8)	5.52 (140)
67	A100	9.46 (240)	7.17 (182)	2.43 (61.7)	3.58 (90.9)	5.98 (152)
	A150	10.2 (259)	7.65 (194)	2.43 (61.7)	3.58 (90.9)	6.06 (154)
68	A100	9.46 (240)	7.17 (182)	2.58 (65.5)	3.57 (90.7)	5.98 (152)
	A150	10.2 (259)	7.65 (194)	2.58 (65.5)	3.57 (90.7)	6.05 (154)
	A220	11.9 (302)	8.75 (222)	2.58 (65.5)	3.57 (90.7)	6.41 (163)
Switching (3-Way) Valves						
62	A15XD	7.55 (192)	4.33 (110)	1.54 (39.1)	2.90 (73.7)	4.61 (117)
63	A30XD	8.50 (216)	4.96 (126)	1.62 (41.1)	2.92 (74.2)	4.83 (123)
65	A60XD	11.4 (290)	6.42 (163)	2.18 (55.4)	3.30 (83.8)	5.41 (137)
67	A100XD	13.2 (335)	7.17 (182)	2.43 (61.7)	3.58 (90.9)	5.98 (152)
68	A100XD	13.2 (335)	7.17 (182)	2.58 (65.5)	3.57 (90.7)	5.98 (152)

Options for ISO 5211-Compliant and Swagelok Pneumatic Actuators

Swagelok offers a range of accessories to enhance instrumentation and process ball valve performance and control, including solenoid valves, limit switches, and position sensors. Factory assemblies and kits for field assembly are available.

For more information, see the *Swagelok Ball Valve Actuation Options* catalog, MS-02-343.

Electric Actuators

Swagelok electric actuators are rugged and lightweight, and connect alternating- or direct-current power sources. For more information, see the Swagelok *Electric Actuators—141 and 142 Series* catalog, MS-01-35.

Oxygen Service Hazards

For more information about hazards and risks of oxygen-enriched systems, see the Swagelok *Oxygen System Safety* technical report, MS-06-13.

Safe Product Selection
When selecting a product, the total system design must be considered to ensure safe, trouble-free performance. Function, material compatibility, adequate ratings, proper installation, operation, and maintenance are the responsibilities of the system designer and user.

Caution: Do not mix or interchange parts with those of other manufacturers.

Warranty Information

Swagelok products are backed by The Swagelok Limited Lifetime Warranty. For a copy, visit swagelok.com or contact your authorized Swagelok representative.

Swagelok, VCO, VCR—TM Swagelok Company
Grafoil—TM GrafTech International Holdings, Inc.
© 2008–2013 Swagelok Company
Printed in U.S.A., AGS
February 2013, R16
MS-01-146