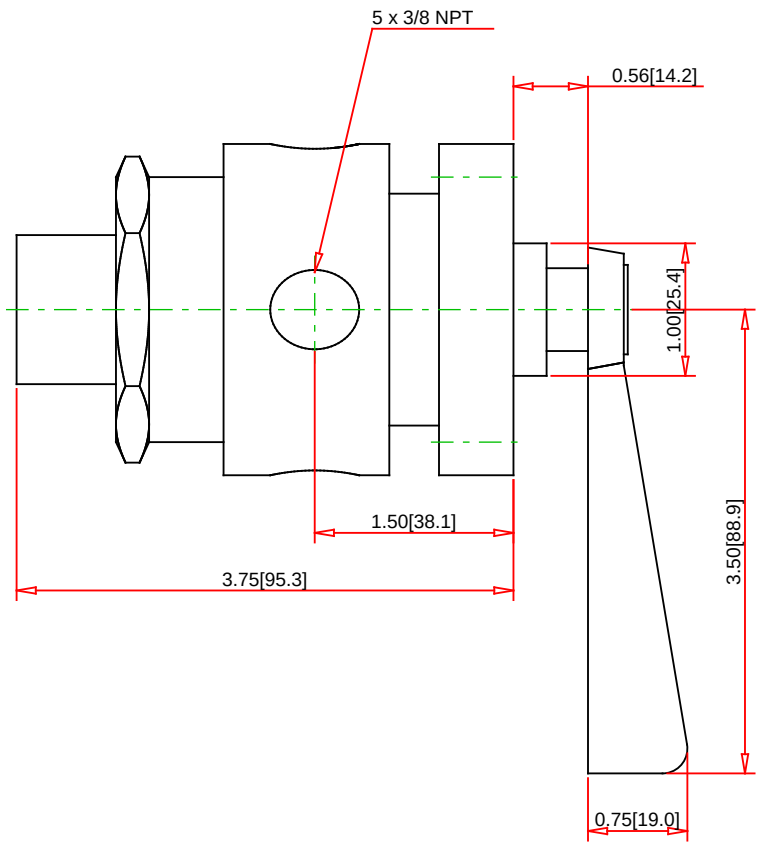

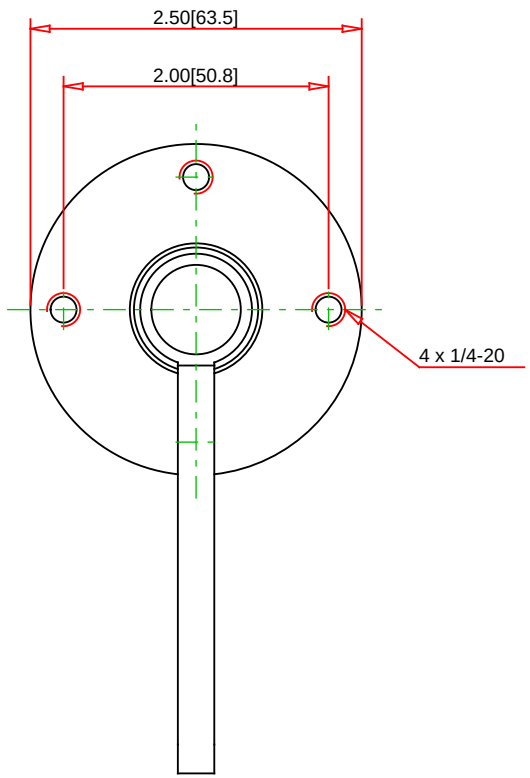

Note:
- Drawings Not To Scale
- Drawings Subject to Change Without Notice
- Dimensions are inches next to [Millimeters]

Part No.:

C5316012360D

Option:
- JIS , DIN & BS Threads
- Sanitary Connections, Tube Connections
- Optional Handles with Locking Devices
- Custom Name Plates and Valve Tags
- Electric & Pnuematic Actuation Packages
- Mufflers
- Custom Port Configurations
- Stem Extensions
- OEM Configurations Upon Request
- Custom Manifold Assemblies

Description:

Valve Type	Selector - Bar Stock Body
Pipe Thread (inches)	3/8
Body Material	316 S.S.
Rotor Material	Precision Tapered 316 S.S.
Sleeve Material	PTFE
Handle Rotation (Degrees)	360
Drillings	5-Way
Pressure Ratings	0-1000 PSI
Standard Handle	#300 Lever
No of Stacks	NA
Options	With Detents

Conant Controls, Inc.
MANUFACTURER OF PRECISION CONTROL VALVES
Call Toll Free 1-800-401-4647

Conant Controls, Inc.
215 Salem St.
Suite K
Woburn, MA 01801
Fax : 781-395-7247
Email : Sales@ConantControls.com
Web : www.ConantControls.com